HAL
open science

4D-based Teaching of High-rise Structural Principles

Sylvain Kubicki, Conrad Boton

To cite this version:

Sylvain Kubicki, Conrad Boton. 4D-based Teaching of High-rise Structural Principles. CIB W078 Conference 2011, Oct 2011, Sophia Antipolis, France. pp.w78-2011-72. halshs-00636044

HAL Id: halshs-00636044

https://shs.hal.science/halshs-00636044v1

Submitted on 26 Oct 2011

HAL is a multi-disciplinary open access archive for the deposit and dissemination of scientific research documents, whether they are published or not. The documents may come from teaching and research institutions in France or abroad, or from public or private research centers.

L'archive ouverte pluridisciplinaire **HAL**, est destinée au dépôt et à la diffusion de documents scientifiques de niveau recherche, publiés ou non, émanant des établissements d'enseignement et de recherche français ou étrangers, des laboratoires publics ou privés.

4D-BASED TEACHING OF HIGH-RISE STRUCTURAL PRINCIPLES.

Sylvain Kubicki[12], Arch. Dr. / R&D Manager, Sylvain.Kubicki@tudor.lu
Conrad Boton[1], Eng. / PhD Student, Conrad.Boton@tudor.lu
[1] *Public Research Centre Henri Tudor, Luxembourg*
[2] *University of Liège, Belgium*

ABSTRACT

4D modeling and visualization is more and more used in construction education curricula. The main interest of this technology is its ability to simulate real sequencing of construction tasks in order to confront the student with real-life construction management issues. This article presents a course for architecture and construction engineers about the teaching of structural principles of high-rise buildings and the particularity of their design and construction. The students use 4D simulation as a support to the analysis of structural characteristics of the studied projects. Pedagogical interest is highlighted in the article. The emphasis is particularly put on the visualization of 3D/4D models. A metamodel of multi-view is proposed and enables the modeling of particular 4D multiple views in order to reuse it. The aim of this work is to build a method assisting students when choosing visualization parameters for realizing 4D simulations.

Keywords: High-rise, Structural principle, 4D simulation, 4D multi-view, Pedagogy

1. INTRODUCTION

The University of Liège in Belgium proposes curriculums for the initial training of engineer-architects and construction engineers. Specific master's courses are developed for the teaching of organizational issues of construction projects and the management of complex projects' teams. Some issues could be noticed regarding some particular types of construction projects or management techniques:

- The design principles of high-rise construction projects are not really addressed in the current curriculum. Moreover the necessary multi-expertise of project management methods during design and construction phases is not part of usual architects/engineers trainings.
- When coming to the teaching of planning methods, traditional planning courses sometime appears as disconnected from reality for students. Indeed they are not really aware of the "in-situ" life of construction projects.

One can recognize that it is usually difficult to address 1) the issue of high-rise design, 2) the technical aspects of tall buildings structures and 3) the characteristics of high-rise construction processes, within a single and short-duration course.

From these statements an original pedagogical scenario inspired by the recent advances in the Construction IT research community is proposed. Research works about 4D models and simulations and their application in pedagogy are considered. Indeed 4D modeling and simulation appears as promising technology for helping students to better analyze high-rise buildings design and construction, and especially their structural principles.

The paper firstly addresses 4D technology and its place in education curricula. Then a specific course is described as well as some student's results regarding 4D use and pedagogical feedback. Further research about describing 4D visualization is proposed in order to improve visualization of 4D models by the students. Possible application is finally illustrated through an example.

2. LITERATURE REVIEW: 4D TECHNOLOGIES IN EDUCATION

2.1 The emerging 4D applications

4D modeling and simulation consists in linking a 3D model with construction project planning in order to visualize the construction process over time. It can be used in many phases of a construction project including design & analyzes, scheduling and management (Tommelein et al. 1994). Previous research works have shown the interest of 4D simulation use (Hartmann et al. 2008). They stated that it has a significant impact on the project realization by increasing productivity, reducing interferences on the ground, enabling easier pre-production and time efficiency (Staub-French et al. 2007). Moreover, 4D users can communicate and coordinate better and reach better performance (Dawood et al. 2007). In the pre-construction phase, the use of 4D simulations is useful to compare the constructability of working methods, to visually identify conflicts and clashes, and also as visual tool for different actors to discuss and to plan the progress of works (Mahalingam et al. 2010).
At date, the use of 4D simulation has considerably been diversified and many innovative applications were proposed since its introduction two decades ago. In addition to the simulation of the construction steps and the identification of clashes and conflicts, 4D CAD enables nowadays optimization of equipment space requirements including the site logistics deployment (Akinci 2003; Heesom et al. 2004). It can also be used to simulate excavation and earthworks (Yabuki et al. 2005; Shah et al. 2008), to manage oil rig management (Doucet et al. 2009) and for urban communication as well (Stellingwerff et al. 2004).
To be more generic, one can consider that it has been shown that 4D simulations are very useful when used to visually, identify and compare "items". Thus, it is more and more used as visual support to education.

2.2 4D in pedagogical curriculums

Construction projects management courses are very diversified in architecture, engineering or construction curricula (Dietz et al. 1976). In architecture curriculums it is usually stated that architecture students do not gain much practical knowledge of construction management and methods (Clayton 2002). With the emergence of computer supporting 3D building modeling, innovative methods are more and more explored in order to improve the construction education experience. (Clayton 2002) described a virtual construction exercise experience with students using 3D CAD and simulation. He concluded that virtual construction is very interesting to teach construction management to students more easily through addressing many learning situations or projects examples. (Perdomo et al. 2005) presented a study with Virginia Tech architecture and building construction department that was investigating the advantage for education between 2D drawings and 3D representation in understanding construction assemblies and details. The results were very positive.

But in curricula addressing complex "construction environments" like bridges, towers or high-rise buildings construction, it is important to decrease the lack of technical subject's integration. Indeed, such environments require treating scale, quickness, working at multiple levels of detail, dealing with design variability, and realistic representation of the work (Russell et al. 2009). And students have to understand difficulties related to the conduct of such project as well as decisions that have to be taken. So, it is important to include the temporal dimension related to the scheduling, in order to explore and analyze the constructability of working methods. 4D simulations appeared to be an innovative solution and some teachers previously implemented it in their courses. (Kang et al. 2004) presented a web-based interactive 4D block tower model for construction planning and scheduling education and showed 4D visualization interests for education. (Sampaio et al. 2006) demonstrated through many examples that virtual reality, including 4D CAD, can be useful in teaching material elaboration. (Wang et al. 2007) described a study to assess the value of using 4D modeling in construction engineering education and compared results from two different 4D processes that are traditional 4D and virtual construction simulator. Both processes were found valuable for student learning experience improvement.

3. TEACHING OF HIGH-RISE STRUCTURE PRINCIPLES THROUGH 4D SIMULATION

The following parts address the course called "Project Management", proposed at University of Liège (Belgium) to construction engineer and architect-engineer in their Master curricula. Firstly the context of this training and the methods used are explained. Then some representative results related to 4D simulations performed by the students are described.

3.1 Pedagogical context

The original aim of "project management" course in Master curricula is to confront the students with the complexity inherent to large-scale construction projects. When addressing "large scale" project, the focus is both on the complexity of the design project itself (through its architectural, structural, equipment-related… dimensions) and on the organization and project management methods that are required for involving viewpoints of multiple experts. Since 2009, high-rise building are chosen as large scale project for this course, and the teaching team aims at addressing issues related to their design (especially their structural principles) and to the management of the construction.
The pedagogical scenario retained for this course consists of both theoretical courses and practical works. Practical works are themselves divided into two stages: single-student work and teamwork.

- Theoretical courses aim at providing students with basic knowledge in the fields of high-rise buildings and project management. Structural constraints and common solutions are the main topics of courses. A typology, notably inspired from (Sev et al. 2009), is presented as a support to learning. Vertical transportation systems, as well as façade techniques, are also addressed. The second part of the course introduces project management especially in terms of organizations of actors and coordination mechanisms. Finally IT-supported coordination is explained through existing IT systems and emerging ones.
- Practical works consist of analyzing high-rise buildings projects. In a first stage (4-5 working weeks), each student is expected to analyze various aspects of a project based on the theoretical inputs. They also have to model a regular storey of the building using Google SketchUp™, as an introductory exercise (most of construction engineers are not aware of modeling softwares). Then in a second stage, students are grouped within 3 or 4 teams. Each team chooses an interesting building and has to realize a complete analysis about structural principle and construction process. Then they have to propose a 4D simulation "scenario" which aims to provide a "didactic understanding" of building structure and construction. 4D modeling and simulation themselves are the final part of the teamwork. 3D modeling is realized with Google SketchUp ™, and 4D modeling and simulation is enabled thanks to the 4D Virtual Builder© (Nys 2010) plug-in for Google SketchUp ™.

This course has been taught two times, during the fall semesters of 2010 and 2011 academic years. 14 students were involved in 2010, and 12 students participated in 2011. In 2010, 3 teams worked on New-York Times Building (New-York), Sears Tower (Chicago) and Debis Tower (Berlin). In 2011, 4 teams worked on Caja Madrid, Opernturn (Frankfurt), Shard London Tower and World Financial Center (Shanghai).

3.2 Research methodological approach

Beyond the course itself, the paper aims at 1) validating the interest of 4D technologies as support to the teaching of high-rise principles as well as 2) finding ways of improvement for guiding students when they are confronted to modeling and simulating their analyzed projects.
The methodological approach followed in the paper consists in presenting some results in order to describe students' works and the way they perform 4D simulations. From these works we present the pedagogical findings and qualitatively assess on the usefulness of 4D in the framework of the course. Then we suggest going deeper in the analysis of proposed simulations, especially in terms of (multi) visualization. The analysis enables modeling visualization properties. It allows us to open prospects on the guidance that we could provide to students having to perform 4D simulation, especially for choosing modeling and visualization properties for their simulations.

3.3 4D simulations: results from 2009 and 2010 sessions

In this section some results from the 2009 and 2010 sessions are presented. High-rise projects - selected by the students- are briefly exposed and the 4D simulation strategy is described, as well as the obtained 4D visualization. For the purpose of the following analysis and proposition, 4D simulations presented below are considered as independent of the software really used to model or visualize it, but as a composition of 3D + Time views.

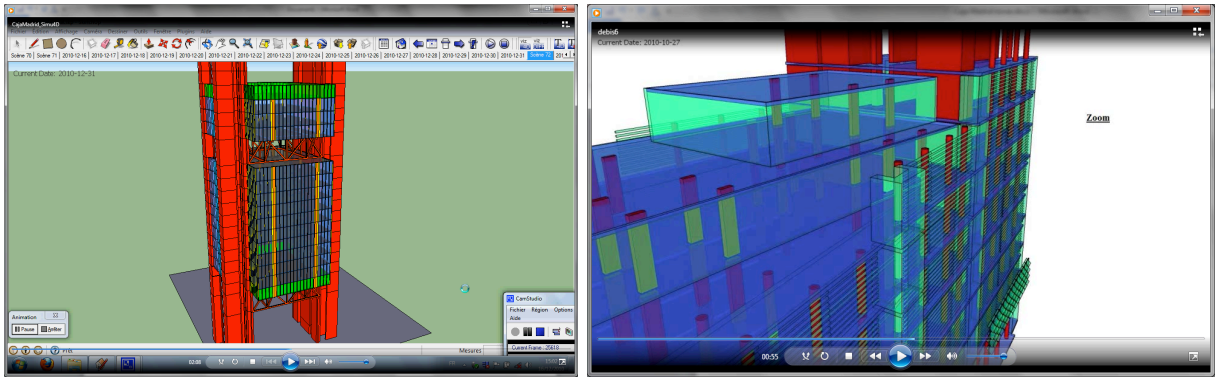

Figure 1: Caja Madrid's (left) and Debis Tower's (right) 4D simulations.

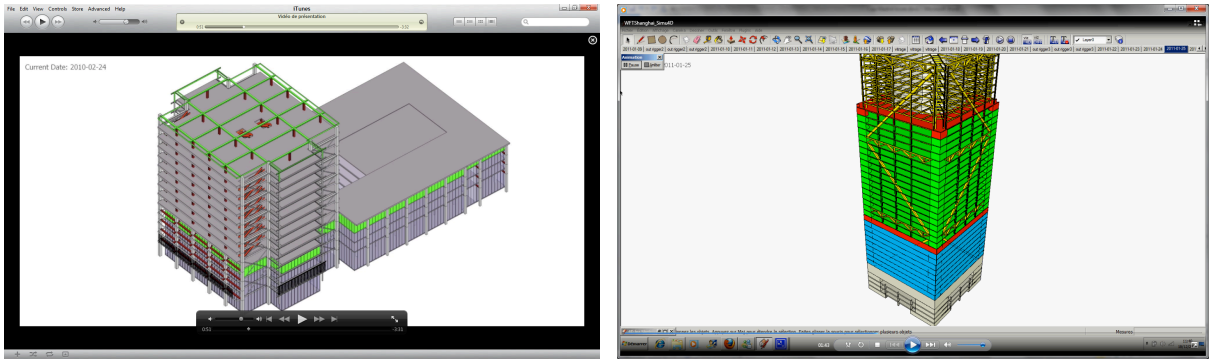

Figure 2: NY Times building's (left) and Shanghai World Financial Center's (right) 4D simulations.

3.3.1 Caja Madrid Tower (2010 session)

The Caja Madrid project (Figure 1, left) (http://en.wikipedia.org/wiki/Caja_Madrid, last accessed 2011/05/06) is a 250 m-high office tower located in Madrid (Spain) and designed by Foster & Partners. Construction started in 2004 until 2008. Three groups of stairs' blocks are constructed around two main concrete cores.

This simulation aims at showing the construction of the structural elements of the tower that are mainly: core, metallic structure and glazing. It also shows the element's bearing level using a shade of color ranging from yellow (for the least bearing elements) to bright red (the most bearing elements). The blue color is used for glazing representation. The floors are considered identical. Time is represented by a list of selectable dates in which the current date is highlighted. The current date is also displayed at the bottom of this list. The simulation uses zoom, perspective and extended zoom to improve understanding.

3.3.2 Debis Tower (2009 session)

The Debis Tower (Figure 1, right) (http://library-towers.wikidot.com/debis-tower, last accessed 2011/05/06) is a 106 m-high building located in Potsdamer platz, Berlin. Construction completed in 1997.

The simulation of Debis tower made by students is based on a simplified planning and shows the offset construction of bearing elements (core, columns, slabs) and facade elements. Elements are visible from their execution dates and appear according to a specific color system: green for columns,

blue for slabs, red for central core. Importance is placed on transparency applied to facade elements and slabs to allow visualizing of the structural principle inside the building. In this simulation, the time is not the subject of a special visualization mode. Current date is simply displayed. This simulation uses zoom, perspective and sectional views to facilitate understanding of specific informations.

3.3.3 New-York Times Building (2009 session)

Ney York Times building (Figure 2, left) (http://newyorktimesbuilding.com/, last accessed 2011/05/06) is 228 m-high tower, designed by Renzo Piano and completed in 2007. The structural principle consists of a concrete core associated with steel structure for the floors.
Simulation of the New York Times Building construction focuses on building components (flooring, core, columns and steel beams, bracing, façade and roof construction). In this simulation scenario, the building is considered as a set of floors that are not identical. Each floor is composed of a certain number of given components. Thus the first floor contains four types of objects, while levels from 2 to 4 are composed of 6 types of objects, such as level 5. Floors from 8 to 52 contain 8 types of objects such as higher levels. Emphasis is given on structural elements (core, columns and steel beams) that are represented with red color. Other items are represented in lighter or darker gray. The green color represents the elements during construction. Partial transparency is used on the facade elements to allow viewing inside the building.Zoom, extended zoom and perspective are used to facilitate understanding of certain construction details. Towards the end, the orbit is used to allows viewing a realistic appearance of the complete building. In this simulation, the time is not subject of a special visualization mode. The current date is simply displayed.

3.3.4 Shanghai World Financial Center Tower (2010 session)

The Shanghai World Financial Tower (Figure 2, right) is a 492 m-high tower located in the district of Pudong (http://en.wikipedia.org/wiki/Shanghai_World_Financial_Center, last accessed 2011/05/06). The project started in 1997, but the construction completed in 2078.
The principle used by students to simulate the construction of the Shanghai World Financial Center Tower aims to bring up the simultaneous work of four different teams. Then, it uses a system of colors to show offset in the groups building works. The central core construction is represented by white color. Yellow is associated with other bearing structural elements and green color represents concrete pouring while glazing is shown with blue color. Items under construction are in red color. The floors are not standard. From time to time, the zoom is used to show the construction of out-riggers or other complex elements. The camera position also changes to improve visibility. Time is represented by a list of selectable dates in which the current date is highlighted. The current date is also displayed at the bottom of the list.

4. MAIN FINDINGS

4.1 Pedagogical feedback

The course presented above is experimental in the engineer-architect and construction-engineer curriculums of University of Liège. It was designed in the continuity of the previous course of project management, which was dedicated to the understanding of particular constraints related to the planning and design of large-scale projects. The main hypothesis is to benefit of 4D modeling and simulation technologies.
The feedbacks from teaching team are the following:

- Firstly, the use of 3D modeling tools like Google SketchUp™ is possible and valuable, also when students are not familiar with 3D modeling (it is the case of the construction-engineers students). SketchUp™ is rapidly understood and usable by all of the students.
- 4D modeling of high-rise building (although the aim is not to provide a very fine-grained planning) requires a deep understanding of structural principle, because it impacts the skeleton of the construction planning (i.e. Work Breakdown Structure). The pedagogical team

appreciates the transparency and completeness of students' analyses. This is due to the need of clearness when modeling buildings' main structural 3D elements as well as planning's WBS.

- Finally, as high-rise construction documentation is usually difficult to obtain (planning as-realized, detailed plans etc.) students have to infer both structural principles and construction planning. It requires them both making hypotheses on the design as well as finding evidences of construction procedures (photos, webcam, or TV documentary). The exercise then becomes original compared to classical "planning" or "structure" courses and students get easily engaged.

The previous 4D simulations examples show that many different scenarios can be proposed by the students in order to realize a construction 4D simulation. These scenarios depend on the aim of the simulation, what they want to visualize as well as the need of interaction.

4.2 Synthesis of 4D simulation results

Some common properties can be identified to describe the simulations, especially in terms of visualization. In Table 1, some of these properties are identified on the basis of the 4 examples.

		Caja Madrid Tower simulation	**Debis Tower simulation**	**New-York Times Building simulation**	**World Financial Tower simulation**
Building modeling principles					
	Floor type	Standard	Not standard	Not standard	Not standard
	Shown elements	Central core, Metal structure, Outrigger, Glazing	Central core, Structure (columns), Slabs, Facades	Central core, Steel columns and beams, Bracing, Facade, Circulations, Roof.	Core, Steel struct., Concreting, Bracing, Outrigger, Glazing
Color semantic					
	Execution state	Green color for ongoing works	Not applicable	Green color for ongoing works	Red color for ongoing works
	Building element	- Color scale corresponds to elements bearing capacity - Blue color represents glazing	- Green color represents columns - Blue color represents slabs - Red color represents central core	- Red color represents structure elements	- Yellow color represents structure elements - Green represents concreting - Blue represents glazing
	Transparency	- Full transparency for not started elements - Partial transparency on glazing	- Full transparency for not started elements - Partial transparency on glazing and roofs	- Full transparency for not started elements	- Full transparency for not started elements - Partial transparency on glazing
Time (planning)					
	Time view	- Dates list with current date highlighted - Current date displayed	- Current date displayed	- Current date displayed	- Dates list with current date highlighted - Current date displayed
Camera					
	Camera principles	Zoom, Extended zoom, Perspective	Zoom, Perspective, Section	Zoom, extended zoom, Perspective, Orbit	Zoom, Orbit

Table 1: 4D modeling and visualization properties.

It is then possible to describe and to compare 4D simulations according to these identified visualization-related properties. In oder to be able to do it precisely and accurately, it is important to enable modeling visualizations in a structured way. Model Driven Engineering approach recommends

the use of meta-models, thus each model has to be conformed to its meta-model (Favre 2004). A « 4D simulation view" can be considered as a coordinated set of multiple views (CMV): the association of a 3D view and a planning view, coordinated through appropriate interaction principles.

5. TOWARDS MODELING 4D MULTI-VIEWS FOR PEDAGOGY

5.1 A metamodel for describing 4D multi-views

"A multiple view system uses two or more distinct views to support the investigation of a single conceptual entity" (Wang-Baldonado et al. 2000) and "coordinated multiple views" concept can be used when operations on the views are coordinated (Roberts 2007). So 4D views can be considered as coordinated multiple views (Boton et al. 2011), composed of 3D view and planning view where activities are linked to building elements. 3D and planning views are both business views, visualization modes that practitioners use in their daily work. To be able to model 4D views, we first need an appropriate metamodel. Indeed, Model Driven Engineering (MDE) approach recommends the use of metamodels to define domain languages, thus models have to be conformed to their metamodel. In order to propose a coordinated multiple views metamodel, we rely on the eight guidelines proposed by (Wang-Baldonado 2000) for the design of multiple view systems and the 2x3 taxonomy of multiple window coordination from (North et al. 1997). Proposed metamodel is depicted on Fig 3. This metamodel reuse the main classes of the business view metamodel and create associations between them. Coordinated multiple views are composed of 2 to n business views with coordination mechanisms.

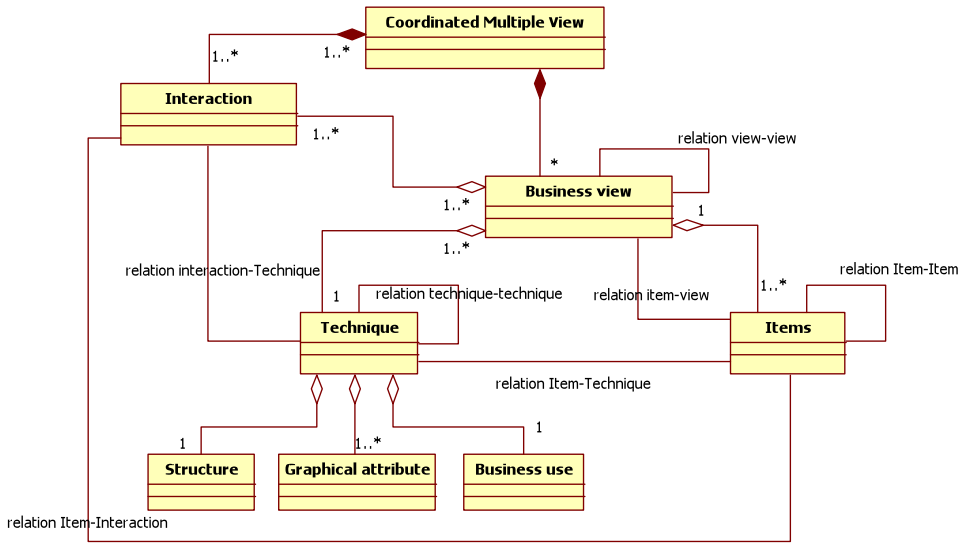

Figure 3: Coordinated Multiple View metamodel.

According to these mechanisms selecting item(s) in one view can lead to selecting/highlighting item(s) in other view(s), navigating one view can lead to navigating other views, or selecting items in one view can lead to navigating other views.
The aim while developing such a metamodel is to enable the description of several 4D multi-views, their storage and the possible comparison of multi-views on the basis of selection criteria. The next part suggests an example of metamodel application aiming at describing a new 4D multi-view inspired from students' work.

5.2 Example of metamodel application

The following example suggests an innovative 4D multi-view based on the Shanghai World Financial Center Tower project analyses performed by the students in the 2010 session. One important aim of the students was to represent the simultaneous work of four different teams of workers. To make this

possible and more expressive, considering 4D simulations as CMV visualizations and using the CMV metamodel (§5.1), the proposed approach enables choosing adapted visualization modes for 3D view as well as for planning view, and to model them. In this example, we rely on the 3D model developed by the students. But, for the planning representation, instead of the list of date used by students, it seems better to use the "line of balance" representation mode. Indeed, this planning visualization technique enables to consider both time and location in the same view. It is then easier to identify clearly the construction offset of the four different teams. In such a planning view, colors system could even be the same as for the 3D representation (grey for central core, yellow for metal structure, light blue for concrete pouring and dark blue for glazing). A mockup of the appearance of such a 4D CMV is shown in Fig 4.

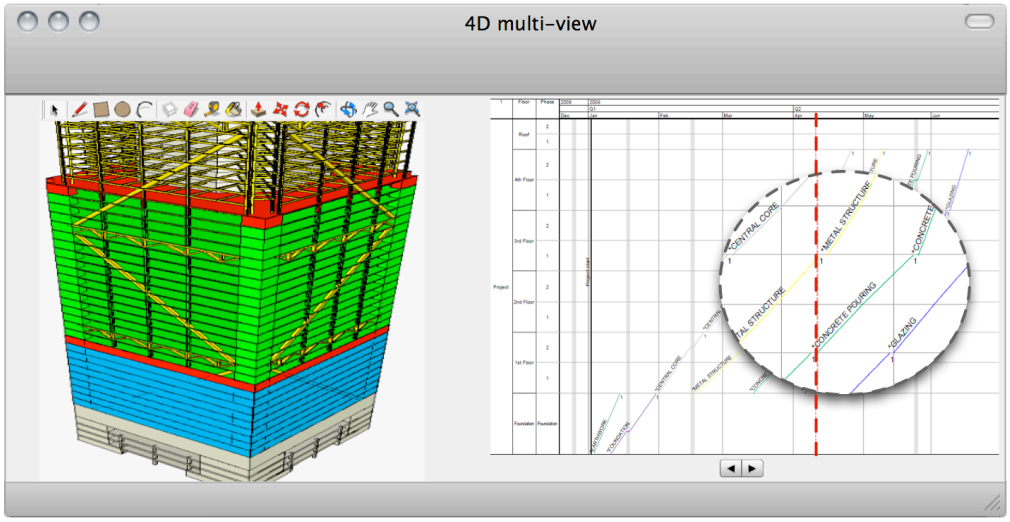

Figure 4: Suggested 4D multi-view.

Relying on the proposed metamodel, such a 4D multi-view could be described by the following model.

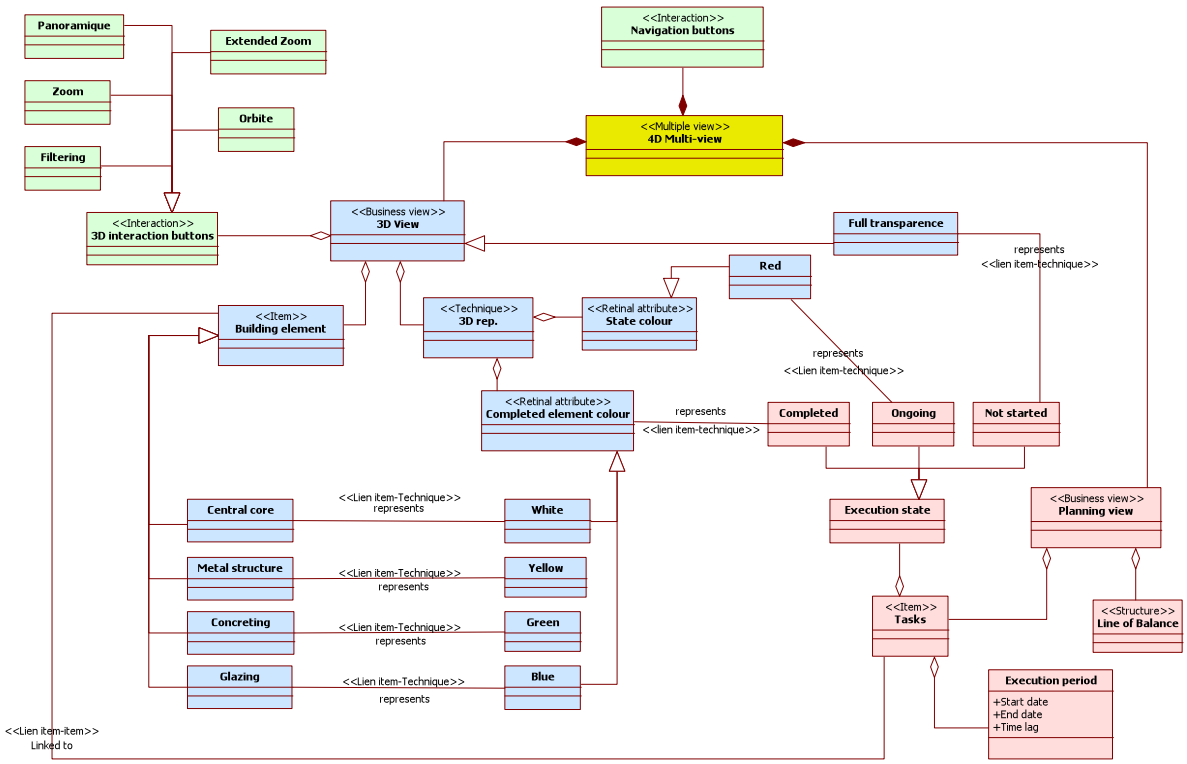

Figure 5: Model of suggested 4D multi-view.

6. CONCLUSION

This article describes a pedagogical course for architect and construction engineers of the University of Liège about the structural principles of high-rise buildings. Within this course, students experiment the use of 3D and 4D tools as support to the analysis of some projects' structures and construction processes. Authors conclude that 4D modeling and simulation of analyzed projects enables a better understanding by the students.

Students' attention is particularly guided to the making of choices during 3D modeling as well as the scenography proposed for 4D visualization: colors used, camera and 3D views proposed and relationship to the timeline of construction. After two sessions of this course the authors note that such choices are wide, and that students do not enough know what 4D simulation is to correctly setup their own scenography. Then, they propose consolidating 4D multiviews and their components through models dedicated to the purpose of "structural principles didactic". A metamodeling approach aiming at describing coordinated multiple views, and previously experimented to 4D multiple views supporting collaboration during pre-construction phase is reused. An example finally shows how an "invented" 4D multiple view can be described relying on the metamodel.

The limit of this approach is that it is extensively theoretical. Then an automatic implementation of the model-based generation of 4D multi-views is not possible today. However the authors underline their prospects towards a repository of 4D multi-views. Indeed the metamodeling approach enables the description of structured models of 4D multi-views, by the way of conceptual modeling tools for editing and storing models. Then it could be envisaged to store such models of 4D multi-views in order to reuse it from one session to another and possibly to improve it, or provide more case studies. Sharing is also a prospect and universities could share their models to the construction education community.

ACKNOWLEDGMENTS

The authors thank the students of the 2009-2010 and 2010-2011 sessions as well as the pedagogical team of the University of Liège, Applied Sciences Faculty, ArGEnCo department. We also thank D-Studio firm for providing the SketchUp plug-in "xD Virtual Builder" and participating to the experiment. The paper has been co-written by a PhD student beneficiary of a PhD AFR grant from Fonds National de la Recherche (FNR), Luxembourg.

REFERENCES

Akinci, B., Tantisevi, K. and Ergen, E. (2003). Assessment of the Capabilities of a Commercial 4D CAD System to Visualize Equipment Space Requirements on Construction Sites, 2003 Construction Research Congress, March 19-21, 2003, Honolulu, Hawaii.

Boton, C., Kubicki, S. and Halin, G. (2011). Method to design coordinated multiple views adapted to user's business requirements in 4D collaborative tools in AEC. 15th International Conference on Information Visualization, July 12-15, 2011, London, UK.

Clayton, M., Warden, R. and Parker, T. (2002). Virtual construction of architecture using 3D CAD and simulation. Automation in Construction, 11(2): 227-235.

Dawood, N. and Sikka, S. (2007). Measuring the effectiveness of 4D planning as a valuable communication tool. 7th International Conference on Construction Applications of Virtual Reality 2007, Penn State University, USA.

Dietz, A. G. H. and Litle, W. A. (1976). Education for Construction. Journal of the Construction Division, ASCE, 102(2): 347-364.

Doucet, M., Ware, C., Arsenault, R., Weber, T., Malik, M. A., Mayer, L. and Gee, L. (2009). Advanced mid-water tools for 4D marine data fusion and analysis. OCEANS 2009, MTS/IEEE Biloxi - Marine Technology for Our Future: Global and Local Challenges, IEEE, Biloxi, MS.

Favre, J. M. (2004). Towards a Basic Theory to Model Driven Engineering. Workshop on Software Model Engineering, WISME 2004, joint event with UML2004, October 11, 2004, Lisboa, Portugal.

Hartmann, T., Gao, J. and Fischer, M. (2008). Areas of Application for 3D and 4D Models on Construction Projects. Journal of Construction Engineering and management, 134(10): 776-785.

Heesom, D. and Mahdjoubi, L. (2004). Trends of 4D CAD applications for construction planning. Construction Management and Economics, 22(2): 171-182.

Kang, J., Lho, B., and Kim, J. (2004). Development of Web-based Interactive 4D Block-Tower Model for Construction Planning and Scheduling Education. Proceedings of the 2004 American Society for Engineering Education Annual Conference & Exposition, American Society for Engineering Education, Salt Lake City, UT.

Mahalingam, A., Kashyap, R. and Mahajan, C. 2010. An evaluation of the applicability of 4D CAD on construction projects. Automation in Construction, 19(2): 148-159.

North, C. and Shneiderman, B. (1997). A taxonomy of multiple window coordinations. Human Computer Interaction Lab, University of Maryland. Tech Report HCIL-97-18.

Nys, K. (2010). Building in four dimensions! In Google SketchUp Workshop, Ed. Focal Press, Burlington, USA, 101-115.

Perdomo, J. L., Shiratuddin, M. F., Thabet, W. and Ananth, A. (2005). Interactive 3D Visualization As A Tool For Construction Education. 6th International Conference on Information Technology Based Higher Education and Training: FB4-23-FB4-28.

Roberts, J. C. (2007). State of the Art: Coordinated & Multiple Views in Exploratory Visualization. CMV '07. 5th International Conference on Coordinated and Multiple Views in Exploratory Visualization, 2nd July 2007, Zurich, Switzerland.

Russell, A., Staub-French, S., Tran, N., and Wong, W. (2009). Visualizing high-rise building construction strategies using linear scheduling and 4D CAD. Automation in Construction, 18(2): 219-236.

Sampaio, A., Henriques, P., and Ferreira, P. (2006). Virtual Reality technology applied in Civil Engineering education. Proceedings of m-ICTE 2006, 4th International Conference on Multimedia and ICT's in Education.

Sev, A. and Özgen, A. (2009). Recent trends in tall building design. CIB-W78 Conference, Nov 10, 2009, Istanbul, Turkey.

Shah, R., Dawood, N. and Castro, S. (2008). Automatic generation of progress profiles for earthwork operations using 4D visualisation model. ITcon. 13: 491-506.

Staub-French, S. and Khanzode, A. (2007). 3D and 4D modeling for design and construction coordination: issues and lessons learned. ITcon. 12: 381-407.

Stellingwerff, M. and Kuhk, A. (2004). 3D/4D Communication Tools for Facilitators in Public Participation. Architecture in the Network Society, 22nd eCAADe Conference Proceedings, Copenhagen, September 15-18, 2004.

Tommelein, I. D., Carr, R. I. and Odeh, A. M. (1994). Knowledge-based assembly of simulation networks using construction designs, plans and methods. Winter Simulation Conference Proceedings.

Wang, L., Messner, J. I. and Leicht, R. (2007). Assessment of 4D modeling for schedule visualization in construction engineering education. 24th CIB W78 Conference, Bridging ITC Knowledge to work, June 26-29, 2007, Maribor, Slovenia.

Wang-Baldonado, M. W., Woodruff, A. and Kuchinsky, A. (2000). Guidelines for Using Multiple Views in Information Visualization. AVI - Advanced Visual Interfaces Conference, May 23-26, Palerme, Italy.

Yabuki, N. and Shitani, T. (2005). A Management System for Cut and Fill Earthworks Based on 4D CAD and EVMS. International Conference on Computing in Civil Engineering. July 12-15, 2005. Cancun, Mexico.