HAL
open science

A Roman Barge from the Kupa River at Kamensko, Croatia: Evidence of a Regional Shipbuilding Tradition of the Danube River Basin in Southeastern Europe

Giulia Boetto, Anton Divić, Krunoslav Zubčić

To cite this version:

Giulia Boetto, Anton Divić, Krunoslav Zubčić. A Roman Barge from the Kupa River at Kamensko, Croatia: Evidence of a Regional Shipbuilding Tradition of the Danube River Basin in Southeastern Europe. G. Boetto; P. Pomey; P. Poveda. Open sea, closed sea: local and inter-regional traditions in shipbuilding proceedings of the fifteenth International symposium on boat and ship archaeology (ISBSA 15), Marseilles, [22-27 October] 2018, 21, CNRS éditions, pp.115-121, 2021, Archaeonautica, 978-2-271-12972-7. halshs-03388924

HAL Id: halshs-03388924

https://shs.hal.science/halshs-03388924

Submitted on 20 Oct 2021

HAL is a multi-disciplinary open access archive for the deposit and dissemination of scientific research documents, whether they are published or not. The documents may come from teaching and research institutions in France or abroad, or from public or private research centers.

L'archive ouverte pluridisciplinaire **HAL**, est destinée au dépôt et à la diffusion de documents scientifiques de niveau recherche, publiés ou non, émanant des établissements d'enseignement et de recherche français ou étrangers, des laboratoires publics ou privés.

A Roman barge from the Kupa River at Kamensko, Croatia: evidence of a regional shipbuilding tradition of the Danube River Basin in southeastern Europe

Giulia Boetto, Anton Divić and Krunoslav Zubčić

Abstract
The Kamensko barge is a flat-bottomed fluvial vessel dated between the 1st century BC and the 3rd century AD. Its remains lie on the riverbed of the Kupa next to the town of Karlovac in Croatia. Constructed mostly from oak on the principles of bottom-based construction, it is 2 m wide and preserved to a length of 12 m. On its last journey it was transporting a cargo of several hundred bricks. Its interesting structural features suggest a kinship with other Roman-era shipwrecks from the Danube hydrographical basin.

Keywords
Bottom-based construction, fluvial navigation, fluvial landscape, Pannonia, flat-bottomed barge

Résumé
L'épave de Kamensko est un chaland fluvial à fond plat daté entre le Ier siècle av. J.-C. et le IIIe siècle apr. J.-C. Ses vestiges ont été découverts dans le lit de la rivière Kupa non loin de la ville de Karlovac en Croatie. Construit principalement en chêne selon les principes de la construction sur sole, il mesure 2 m de large et est conservé sur une longueur de 12 m. Lors de son dernier voyage, il transportait une cargaison de plusieurs centaines de briques. Ses caractéristiques structurelles intéressantes suggèrent une parenté avec d'autres épaves d'époque romaine trouvées dans le bassin hydrographique du Danube.

Mots clés
Construction sur sole, navigation fluviale, paysage fluvial, Pannonie, chaland à fond plat

The riverbed of the Kupa, next to the village of Kamensko in Croatia, holds the remains of a sunken Roman-era river barge, well preserved under the cargo of bricks it was transporting.

Discovered in 2009 and briefly excavated from 2011 to 2014, the shipwreck has been systematically researched between 2015 and 2018 by a team from the Croatian Conservation Institute and the Centre Camille Jullian, making Kamensko the first riverine shipwreck to be systematically investigated in Croatia. This article will present the most interesting results of the project and attempt to place the Kamensko barge within the shipbuilding traditions of the Danube River hydrographical basin.

1. GEOGRAPHICAL AND HISTORICAL CONTEXT

The Kupa River, referred to as *Colapis* by a number of ancient sources, is a tributary of the Sava River and belongs to the Danube hydrographical basin. It is just under 300 km long, which makes it the third longest river in Croatia, but the longest whose source and confluence are both located within the country. Functioning as an important waterway on a strategic position between Pannonia and the Mediterranean, as well as between the Italian peninsula and the Balkans, this river today represents a very interesting, although little studied, fluvial landscape with great archaeological potential (Divić 2016; Divić *et al*. forthcoming).

The village of Kamensko is located on the far southwestern edge of the Pannonian Basin. It is positioned on the right bank of the Kupa, 5 km east of the town of Karlovac, on the closest navigable section of the Kupa to the Adriatic Sea, a mere 70 km as the crow flies through the mountainous region of Gorski Kotar (fig. 1).

Traces of a Bronze and Iron Age settlement (Azinović Bebek 2006, 2007), as well as a Roman one dated between the 2nd and 4th centuries AD (Perkić 2005, p. 19), have been located in the vicinity of Kamensko. These sites might have functioned in relation with the Kupa River as was the case for the city of Karlovac. Founded *ex nihilo* in the 16th century, on a spot where the Kupa receives the Korana, Mrežnica and Dobra Rivers, Karlovac took advantage of its strategic position within an exceptional riverine network and rose to the status of a wealthy river port during the 18th and 19th centuries (Zatezalo 1970).

Kamensko is also located around 60 km west of the modern-day town of Sisak, the Roman settlement of *Siscia* that was founded around 35 BC after the conquest and destruction

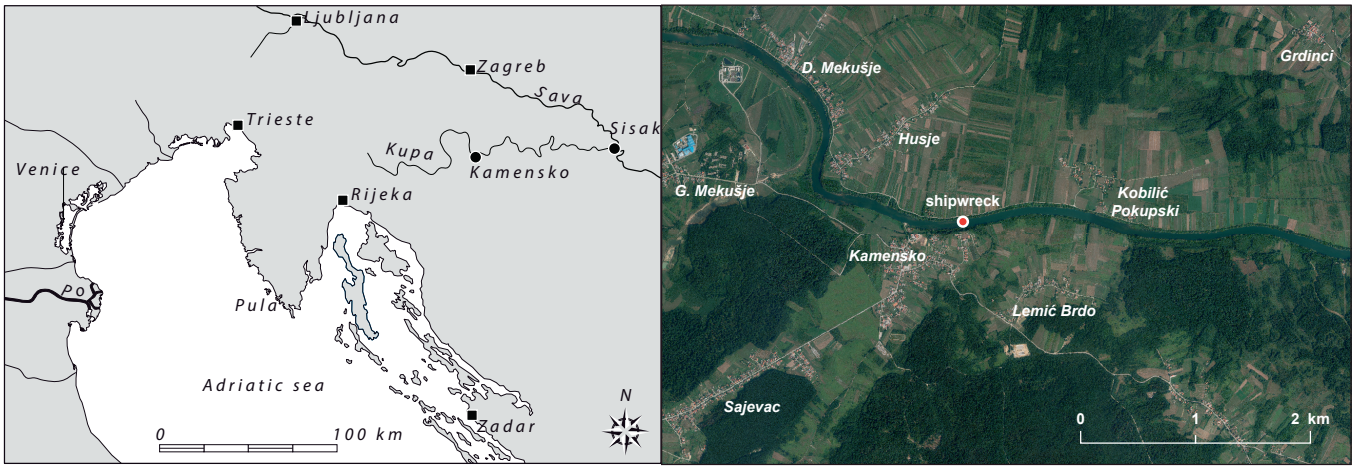

Fig. 1: *Location of the Kamensko shipwreck on the Kupa River (G. Boetto, V. Dumas, AMU, CNRS, CCJ).*

of the Celto-Illyrian settlement and river port, *Segestica*, by the future emperor Octavian. The newly established settlement thrived due to its exceptional position on the confluence of the Kupa and Sava Rivers, subsequently reaching the status of a colony. Settled by veterans from the Fleets of Misenum and Ravenna (Zaninović 1993), the colony became the capital of *Pannonia Savia* under Emperor Diocletian. Based on a brief mention in the 5th century AD *Notitia Dignitatum* (Occ. XXXII, 56), it can be considered as a naval base for a part of the Roman Pannonian fleet, *Classis Pannonica* (Rummel 2008, p. 72). Its nautical importance is also attested by numerous archaeological finds from the river. These include a great number of random artefacts recovered during dredging operations in the 19th and 20th centuries, remains of loading platforms, a number of dugouts, as well as the remains of a flat-bottomed river barge (Šarić 1986; Durman 1992, p. 120; Lolić 2003, p. 137-138; Gaspari *et al*. 2006; Radić Rossi 2009, p. 138; Vukelić, Radman-Livaja 2012; Zubčić 2015; Drnić 2018).

2. FROM DISCOVERY TO SYSTEMATIC RESEARCH

The village of Kobilić Pokupski, situated on the left bank of the Kupa opposite Kamensko, has been known to archaeologists for decades due to the numerous fragments of bronze sculpture that have been extracted from the riverbed of the Kupa by sand dredgers. These irregular pieces of roughly broken, monumental Roman sculpture made up a cargo transported by the river, most likely towards the *Siscia* foundries in order to be recycled. Extracted from the riverbed as early as 1913 and on towards the end of 20th century, the fragments were generally sold to collectors or in nearby Karlovac as scrap metal, with only 89 pieces remaining preserved until today in Karlovac City Museum (Šarić 1985).

In an attempt to locate this endangered 'bronze shipwreck', co-author Krunoslav Zubčić launched a systematic prospection campaign in 2007. Although no bronze fragments were ever located, the 2009 survey led to the discovery of a mound of bricks at a depth of approximately 5 m that was identified as the cargo of a Roman-era river barge. Its importance immediately asserted, the discovery was followed by several short annual research campaigns (Zubčić 2010; 2014) and by four systematic excavations as part of a Franco-Croatian research project (Boetto 2015, p. 68-82; 2016, p. 16-28; 2017, p. 23-32; 2018, p. 13-21)[1].

3. THE WRECK SITE

The wreck of the barge is 2 m wide and preserved to a length of 12 m, following an approximate east/west orientation according the course of the river. It is located some 30 m from the right bank of the Kupa River (fig. 2).

The longitudinal layout of the wreck does not follow the flat morphology of the surrounding riverbed. Its upstream extremity, identified as the prow, has remained relatively well preserved due to the fact it lies at a lower level than its downstream counterpart and was fully covered by sediment consisting of sand, silt and small pebbles. The downstream extremity protrudes from the sediment and was most likely destroyed by the river flow or sand dredgers due to its greater exposure.

Transversally, the wreck leans northwards, its starboard bilge strake lying at a deeper level than the port bilge strake. Due to the fact that it was fully covered by sediment and the brick cargo, the starboard bilge strake has remained preserved almost to its original height (fig. 2).

4. THE BRICK CARGO

On its last journey the Kamensko barge was transporting a cargo of several hundred bricks, on average 43.8 cm long, 5.6 cm thick and 31 cm wide, whose standardised units of measurement classify them as *Lydion* (Brodribb 1987, p. 3, 37).

1. The project has been supported by the Ministry of Culture of the Republic of Croatia, the French Ministry of Europe and Foreign Affairs through its archaeological programme 'ADRIBOATS', the INSHS of the CNRS, and Aix-Marseille University/Ecole française de Rome through two PhD programmes under the direction of G. Boetto – one focused on the fluvial landscape of the Kupa River (A. Divić) and the second on the study of the wood for ship construction (A. Ferreira Dominguez).

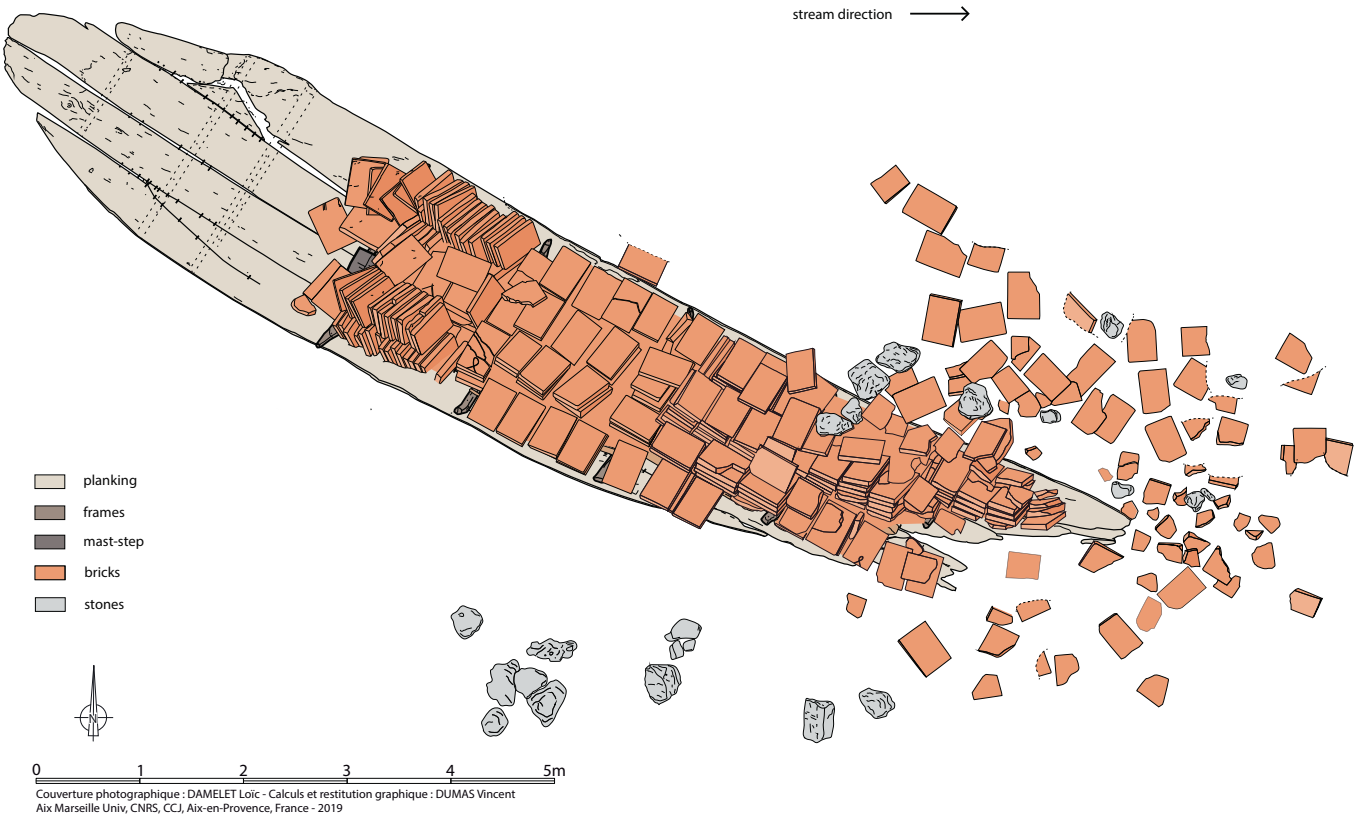

Fig. 2: *The shipwreck with its cargo of bricks (V. Dumas, AMU, CNRS, CCJ).*

The bricks, stacked in columns and arranged in rows, were settled on a support made out of branches and small tree trunks arranged longitudinally on top of the frames. This dunnage, used for preventing any damage both to the hull and the cargo, might have been sold or used as firewood after the unloading of the brick cargo (fig. 3).

We can estimate that the Kamensko barge was transporting a cargo of some 600 bricks, which would, with an average weight of 11 kg per brick, allow us to estimate the minimum tonnage of the vessel at 6 tons. More precise data will be gathered after the completion of the reconstruction of the original hull shape and structure.

A number of both unintentional and deliberate markings were noted impressed in the bricks. Unintentional ones include imprints of human feet, both barefoot and wearing hobnailed *caligae,* as well as dog paw prints. Although no epigraphic workshop stamps were found, more than 80% of the bricks bear an alpha-shaped symbol, impressed on the short sides of the bricks before firing. In one instance the alpha is accompanied by a cross-shaped symbol, possibly the Roman numeral X, while on another brick a total of three alphas appear. Three bricks bear marks of a semicircle while on one brick the underlined Roman numeral CCXLI is visible.

It seems likely that all the aforementioned markings can be placed in relation with the brick production process, being personal signatures, workshop marks, and ways for tracking the productivity of workers, as noted elsewhere on similar finds (Brodribb 1979, p. 215; Matijašić 1986, p. 212). The bricks also bear witness to the homogeneity of the cargo, probably hailing from a single workshop that relied on the extensive local waterway network in order to distribute its product. This assumption is confirmed by the discovery of the same alpha-shaped symbol, appearing on most of the bricks, inscribed with a burnt point into the port bilge strake of the barge, placing the cargo and the barge in a mutual relation.

5. THE STRUCTURE

The Kamensko river barge is a flat-bottomed vessel of a bottom-based construction (Hocker 2004; Pomey, Rieth 2005, p. 33, 195-198).

Fig. 3: *View of the brick cargo lying on the dunnage. The northern side of the barge is preserved almost to its original height (L. Damelet, AMU, CNRS, CCJ).*

The bottom is made out of two oak strakes, 36 cm wide and 6 cm thick on average. One strake is made out of a single plank (P2/11/13), while three planks compose the second strake (P3/7 assembled with an oblique scarf to P10, and P4/9) (fig. 4).

The two bottom strakes are inserted between the bilge strakes: P1/12/14 on the starboard side and P5/6/8 on the port side. These two bilge strakes, each cut from a single large oak trunk, as much as 1 m wide in diameter, constituted the sides as well as a part of the bottom of the barge (fig. 3). The starboard bilge strake can be continuously followed along a length of 11 m and, due to the northern inclination of the wreck, is preserved almost to its original height, which measures 60 cm. It is possible that the top of this bilge strake also represents the sheer of the barge, as there are no indications of any side planks being added. The port bilge strake, broken just after the turn of the bilge due to its greater exposure, presents two long oblique repairs, one forward of the frame F11S, the other between F9S and F10S.

The strakes are assembled together by a great number of small metal clamps, driven across the seams at regular intervals both from the inside and the outside of the hull (fig. 5). Up to 4-5 cm long and around 1 cm wide, they have been inserted in already prepared notches. The same assembly system was used for repairing the cracks that occurred in the port bilge strake.

A sample of the eastern extremity lifted in 2018, composed of a part of the starboard bilge strake P1/12/14 and its adjoined bottom strake P2/11/13, allowed us to confirm the presence of the clamps on the external part of the barge as well, where they have been driven in shorter intervals (between 8.5 and 11 cm) than in the interior (between 11 and 15 cm)

Apart from holding the hull together, the metal clamps held in place a waterproofing material of vegetal origin, inserted in the form of braids or cords[2] in the seams between the planks, according to the principles of luting (fig. 5).

Five frames have been preserved and documented *in situ*, while the position of another two can be established in the prow due to the presence of treenails in the hull. The frames, 12 cm moulded and 8 cm sided, are made out of paired knees settled side by side, the starboard knee always placed forwards. They have been carved from already curved oak branches and attached to the hull by a limited number of facetted treenails (diam. 2 cm), 3 or 4 per knee. The frames themselves are very widely spaced, the room and space amidships being 1.5 m and somewhat decreasing towards the prow (fig. 4).

6. THE PROPULSION SYSTEM

On the western part of the wreck, towards the prow, the mast step of the barge was preserved under the brick cargo. It is made of oak, has a rectangular section 30 cm wide and 14 cm high, and is 182 cm long. It was settled longitudinally on the bottom planks between frames F10 and F11. Its extremities were cut in order to be settled onto these frames, to which it had been attached by two nails driven from the inside of the hull, one on each extremity (fig. 4).

In the middle, the timber has been carved with a recess 13.8 cm long, 11.7 cm wide and 11 cm deep. It is likely that this

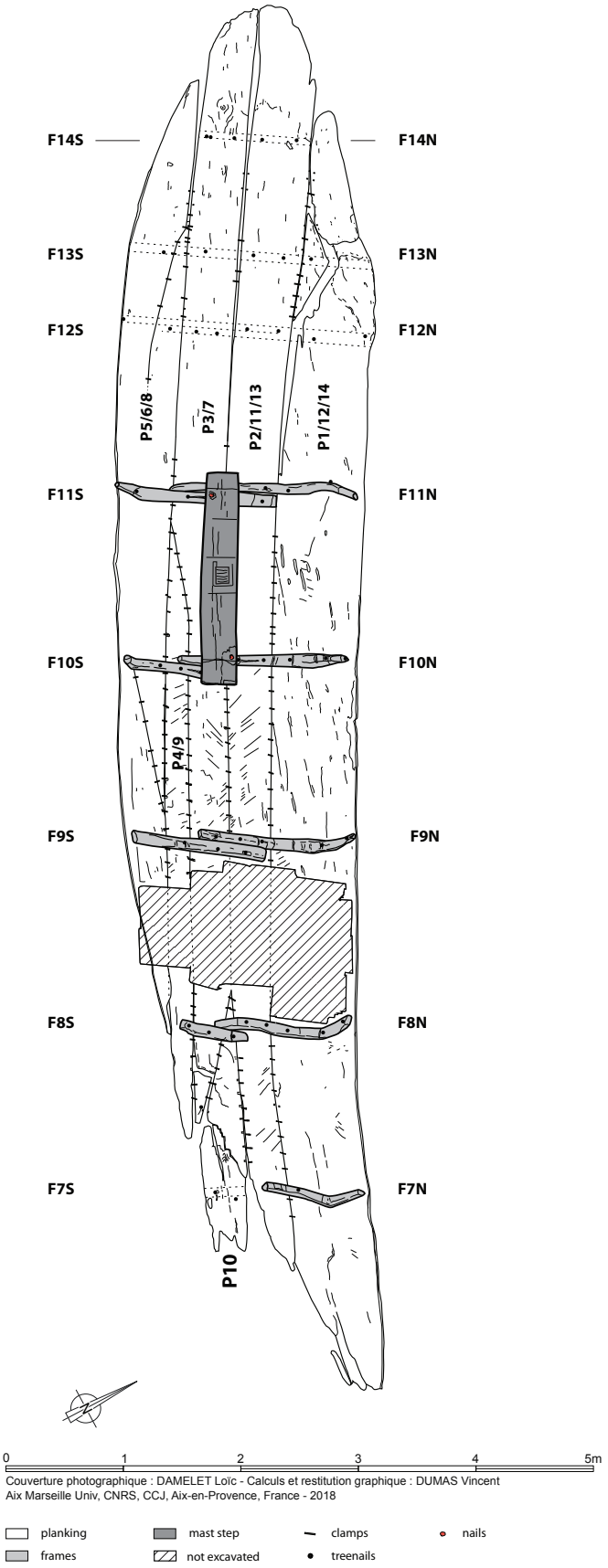

Fig. 4: *Preserved structure of the barge (V. Dumas, AMU, CNRS, CCJ).*

2. The analysis of this material is ongoing.

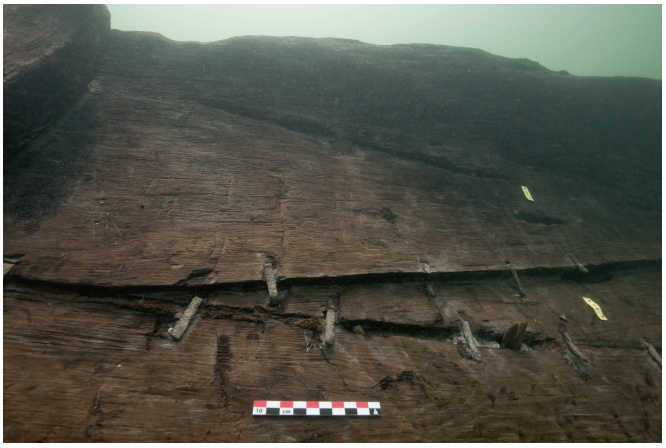

Fig. 5: *View of the bottom of the barge with the clamps connecting the planks (L. Damelet, AMU, CNRS, CCJ).*

mast step housed a towing mast used for hauling the barge upstream, a typical riverine system of propulsion attested in both Roman iconography and archaeological sources (Arnold 1992, p. 57, 84-85; de Izarra 1993, p. 123; Rieth 1998, p. 106-109; Marlier, Poveda 2014, p. 209-211). It is interesting to note that on the Kupa River the practice of towing vessels upstream by manpower, using prisoners or poor peasants named *burlaci*, survived until the 20th century although haulers were gradually replaced by animals from the second half of the 19th century onwards (Ott 2008, p. 68).

The presence of the mast step allows us to identify the western or upstream extremity as the prow of the barge. The fact that the brick cargo covered the mast step on the barge's last voyage allows us to propose the hypothesis that the barge was not being towed upstream, but was sailing downstream, in the direction of *Siscia*. The position of the shipwreck on the river bottom, therefore, does not necessarily indicate the sailing direction of the barge, as it might have rotated during the wrecking process.

7. DATING

In order to obtain an absolute date for the construction of the barge, two accelerator mass spectrometry (AMS) radiocarbon analyses were performed by the Vienna Environmental Research Accelerator (VERA) and by the Centre de Datation par le Radiocarbone in Lyon. The first sample (VERA-5732) yielded the calibrated date of 40 BC – 230 AD (95.4% probability) while the second (Lyon-14133-SacA49774) resulted in the calibrated date 82 – 234 AD (95.4% probability), placing the barge construction in a wide timespan between the middle of the 1st century BC and the first half of the 3rd century AD. A third AMS date (Lyon-14132-SacA49773) performed on an element of the dunnage (C6) yielded a similar date (117 – 252 AD, 91.5% probability).

8. CONCLUSION

The use of clamps for connecting the planking appears very sporadically in Roman fluvial shipbuilding, and is documented only in a few cases of repairs (Arnold 1992, p. 35). Clamps were never used as a principal joining element, except on a small group of relatively less-known river barges, all hailing from the middle section of the Danube hydrographical basin in Slovenia, Croatia and Serbia.

These are the vessels from Sinja Gorica, Sisak, and Kušjak (Erič *et al*. 2014; Gaspari *et al*. 2006; Bockius 2003), all three presenting a number of similar architectural characteristics to the Kamensko barge, although different in shape and dimensions. The vessels are flat-bottomed, bottom-based, with carved bilge strakes. Their strakes are assembled by numerous, small, metal clamps that also hold luting material of vegetal origin in the seams. The frames, except in the case of Sinja Gorica, are attached to the hull by wooden treenails, another uncommon element in Roman fluvial shipbuilding where nails were predominantly used (McGrail 1995, p. 140; Arnold 1992, p. 82, 98-99; 1998, p. 74; 1999).

Based on their architectural similarities, and affiliation with a certain time and a certain nautical transport zone, these vessels form a specific assembly belonging to one of the Roman fluvial shipbuilding traditions proper to the Danube hydrographical basin (Boetto, Rousse 2011, 2012; Boetto 2016b; Pomey, Boetto 2019, p. 6, 17-18).

The second shipbuilding tradition is represented by a large flat-bottomed barge from Lipe, discovered in the 19th century next to the Ljubljanica River in Slovenia and dated between the 2nd century BC and the 1st century AD (see Gaspari in this volume). Its strakes were assembled by the sewing technique, a technological transfer from the northeastern Adriatic where this technique has been attested in shipbuilding from the Bronze Age and well into the Roman imperial era (Boetto, Rousse 2011, 2012; Boetto 2016b; Pomey, Boetto 2019, p. 17-18). It is possible that, within the Danube hydrographical basin, this Mediterranean technique evolved into the more cost- and time-effective assembly by metal clamps.

The technological and chronological relations between these two shipbuilding traditions of the Danube hydrographical basin and between the other inland shipbuilding traditions of continental Europe constitute important questions that could be clarified in the future by continued pursuit of systematic research in the Kupa River and, more generally, in the Danube hydrographical basin.

ACKNOWLEDGMENTS

We would like to thank all the participants of the four excavation campaigns on the Kamensko shipwreck. In particular, we are indebted to Alba Ferreira Domínguez, who identified the wood species used in the barge construction, and Vincent Dumas, who prepared the graphic documentation for this contribution.

REFERENCES

Arnold B.

1992 *Batellerie gallo-romaine sur le lac de Neuchâtel*, Neuchâtel, Musée cantonal d'archéologie, tome 2, Archéologie neuchâteloise 13.

1998 Embarcations romano-celtiques et construction sur sole, in É. Rieth (ed.), *Concevoir et construire les navires. De la trière aux picoteaux*, Ramonville Saint-Agne, Editions Erès, p. 73-90.

1999 Some remarks on Romano-Celtic boat construction and Bronze Age wood technology, *IJNA* 28.1, p. 34-44.

Azinović Bebek A.

2006 Kamensko – pavlinski samostan, *Hrvatski arheološki godišnjak* 2/2005, p. 183-184.

2007 Kamensko – pavlinski samostan, *Hrvatski arheološki godišnjak* 3/2006, p. 211-212.

Boetto G.

2015 *ADRIBOATS – Navires et navigation en Adriatique orientale dans l'Antiquité. Rapport des opérations 2015*, Aix-en-Provence, Centre Camille Jullian (unpublished report).

2016a *ADRIBOATS – Navires et navigation en Adriatique orientale dans l'Antiquité. Rapport des opérations 2016,* Aix-en-Provence, Centre Camille Jullian (unpublished report).

2016b Recherches d'archéologie navale en Adriatique orientale. *Comptes Rendus de l'Académie des Inscriptions et Belles-Lettres*, novembre-décembre, p. 1401–1422.

2017 *ADRIBOATS – Navires et navigation en Adriatique orientale dans l'Antiquité. Rapport des opérations 2017 & Opérations projetées en 2018,* Aix-en-Provence, Centre Camille Jullian (unpublished report).

2018 *ADRIBOATS – Navires et navigation en Adriatique orientale dans l'Antiquité. Rapport des opérations 2018 & Bilan du programme 2015-2018; Nouveau programme 2019-2022 & Opérations projetées en 2019,* Aix-en-Provence, Centre Camille Jullian (unpublished report).

Boetto G., Rousse C.

2011 Le chaland de Lipe (Ljubljana, Slovénie) et la tradition de construction « sur sole » de l'Europe sud-orientale : quelles influences méditerranéennes ? in G. Boetto, P. Pomey, A. Tchernia (ed.), *Batellerie gallo-romaine. Pratiques régionales et influences maritimes méditerranéennes*, Paris/Aix-en-Provence, Errance/Centre Camille Jullian, Bibliothèque d'archéologie méditerranéenne et africaine 9, p. 179-191.

2012 Traditions régionales d'architecture navale en Adriatique à l'époque romaine, *Histria Antiqua* 21, p. 427-441.

Brodribb G.

1979 Markings on Tile and Brick, in A. McWhirr (ed.), *Roman Brick and Tile: Studies in Manufacture, Distribution and Use in the Western Empire*, Oxford, British Archaeological Reports, BAR International Series 68, p. 211-220.

1987 *Roman Brick and Tile*, Gloucester, Alan Sutton Publishing.

Divić, A.

2016 *A Roman barge from the river Kupa at Kamensko (Croatia); the preliminary study of its architecture in the context of southeast European bottom-based naval construction*, Aix-en-Provence, Aix-Marseille University (unpublished master's dissertation).

Divić A., Boetto G., Zubčić K.

Forthcoming The Kupa River (Croatia): A preliminary reconstruction of a fluvial landscape during antiquity, in L. Kröger (ed.), *Proceedings of the conference River valleys, river vessels, river harbours – Records from Antiquities and Medieval times, Jena 2018*.

Drnić I. (ed.)

2018 *Segestica and Siscia – From the periphery of the Empire to a provincial centre*, Zagreb, Archaeological Museum in Zagreb.

Durman A.

1992 O geostrateškom položaju Siscije, *Opvscula archaeologica 16*, p. 117-131.

Erič M., Gaspari A., Čufar K., Solina F., Verbič T.

2014 Zgodnjerimska ladja iz Ljubljanice pri Sinji Gorici, *Arheološki vestnik* 65, p. 187-254.

Gaspari A., Erič M., Šmalcelj M.

2006 Roman river barge from Sisak (Siscia), Croatia, in L. Blue, F. Hocker, A. Englert (eds), *Connected by the sea, Proceedings of the Tenth International Symposium of Boat and Ship Archaeology (ISBSA 10)*, *Roskilde 2003*, Oxford, Oxbow books, p. 284-289.

Hocker M. F.

2004 Bottom-based Shipbuilding in Northwestern Europe, in F. M. Hocker, C. A. Ward (eds), *The Philosophy of shipbuilding. Conceptual Approaches to the Study of Wooden ships*, College Station, Texas A&M. University Press, p. 65-93.

Izarra de F.

1993 *Hommes et fleuves en Gaule romaine*, Paris, Errance.

Lolić T.

2003 *Colonia Flavia Siscia,* in M. Šašel Kos, P. Scherrer (eds), *The Autonomous Towns of Noricum and Pannonia / Die autonomen Städte in Noricum und Pannonien*, Ljubljana, Narodni muzej Slovenije, Situla 41, p. 131-152.

Marlier S., Poveda P.

2014 Présentation et analyse du système mécanique, in S. Marlier (ed.), Arles-Rhône 3. *Un chaland gallo-romain du ier siècle après Jésus-Christ*, Paris, CNRS editions, Archaeonautica 18, p. 209-216.

Matijašić R.

1986 Lateres siscienses, *Vjesnik Arheološkog muzeja u Zagrebu* 19, p. 203-215.

McGrail S.

1995 Romano-Celtic boats and ships: characteristic features, *IJNA* 24.2, p. 139-145.

Ott I.

2008 *Karlovački leksikon*, Zagreb, Školska knjiga.

Perkić D.

2005 *Crkva Blažene Djevice Marije Snježne i Pavlinski samostan u Kamenskom: Elaborat sa zaštitnih arheoloških iskopavanja i istraživanja 1999-2002*, Karlovac (unpublished report).

Pomey P., Boetto G.

2019 Ancient Mediterranean Sewn-Boat Traditions, *IJNA* 48.1, p. 5-51.

Pomey P., Rieth É.

2005 *L'archéologie navale*, Paris, Errance.

Radić Rossi I.

2009 Dugouts of Croatia, in R. Bockius (ed.), *Between the Seas. Transfer and Exchange in Nautical Technology, Proceedings of the Eleventh International Symposium of Boat and Ship Archaeology (ISBSA 11)*, *Mainz 2006*, Mainz, Verlag des römisch-germanischen Zentralmuseums, RGZM-Tagungen 3, p. 133-145.

Rieth É.

1998 *Des bateaux et des fleuves. Archéologie de la batellerie du Néolithique aux Temps modernes en France*, Paris, Errance.

Rummel C.

2008 *The fleets on the northern frontier of the Roman empire from the 1st to 3rd century*, PhD thesis, Nottingham, University of Nottingham.

Šarić I.

1985 Rimski brončani materijal izvađen iz rijeke Kupe kod Karlovca, *Izdanja hrvatskog arheološkog društva* 10, p. 69-89.

1986 Zaštitno arheološko istraživanje lokaliteta „Kovnica“ u Sisku 1985. godine, *Obavijesti Hrvatskog arheološkog društva* 18.1, p. 28-29.

Vukelić V., Radman-Livaja I.,

2012 *Blago rijeke Kupe – Arheološka istraživanja Kupe kod Siska prije 1. svjetskog rata,* Zagreb, Arheološki muzej u Zagrebu.

Zaninović M.

1993 Classis Flavia Pannonica, *Izdanja Hrvatskog arheološkog društva* 16, p. 54-58.

Zatezalo Đ.

1970 Kupa kao plovni put u XVIII. i XIX. stoljeću, in Zatezalo Đ. (ed.), *Karlovac, radovi i građa iz dalje i bliže prošlosti*, Karlovac, Historijski arhiv u Karlovcu, Zbornik 2, p. 7-104.

Zubčić K.

2010 Rijeka Kupa – antički brodolom, *Hrvatski arheološki godišnjak* 6/2009, p. 308-310.

2014 Rijeka Kupa – antički brodolom. *Hrvatski arheološki godišnjak* 10/2013, p. 301-302.

2015 *Izvještaj o izvedenim radovima tijekom arheološkog rekognosciranja i istraživanja rijeke Kupe u Sisku,* Zagreb, Zagreb, Hrvasti restauratorski zavod (unpublished report).