HAL open science

Enthymemathical proofs and canonical proofs in Euclid's plane geometry

Abel Lassalle, Marco Panza

▶ To cite this version:

Abel Lassalle, Marco Panza. Enthymemathical proofs and canonical proofs in Euclid's plane geometry. H. Tahiri. The Philosophers and Mathematics, Springer, pp.127-144, 2018, 978-3-319-93733-5. halshs-03946805

HAL Id: halshs-03946805

https://shs.hal.science/halshs-03946805v1

Submitted on 19 Jan 2023

HAL is a multi-disciplinary open access archive for the deposit and dissemination of scientific research documents, whether they are published or not. The documents may come from teaching and research institutions in France or abroad, or from public or private research centers.

L'archive ouverte pluridisciplinaire **HAL**, est destinée au dépôt et à la diffusion de documents scientifiques de niveau recherche, publiés ou non, émanant des établissements d'enseignement et de recherche français ou étrangers, des laboratoires publics ou privés.

Enthymemathical proofs and canonical proofs in Euclid's plane geometry·

Abel Lassalle Casanave
UFBA, CNPq / Brazil
Marco Panza
CNRS, IHPST (CNRS, Univ. of Paris 1 Panthéon-Sorbonne) / France

Abstract

Since the application of Postulate I.2 in Euclid's *Elements* is not uniform, one could wonder in what way should it be applied in Euclid's plane geometry. Besides legitimizing questions like this from the perspective of a philosophy of mathematical practice, we sketch a general perspective of conceptual analysis of mathematical texts, which involves an extended notion of mathematical theory as system of authorizations, and an audience-dependent notion of proof.

Keywords: Proof, Euclid, Philosophy of Mathematical Practice

I. Introduction

By 'Euclid's plane geometry' we will refer here to the theory presented in the first six books of *The Elements*. In those books, the application of Postulate I.2 is not uniform. This simple observation, which will be justified in section II, poses the following methodological question: Is that lack of uniformity to be accepted as a historical fact established on the base of textual evidence? Or does it make sense to ask oneself which of the different ways of application is the one that conform best to Euclid's plane geometry?

· A slightly modified version of this paper, written in Spanish was published in *Revista Latinoamericana de Filosofía*, XLI (2), 2015. We are grateful to Oscar Esquisabel for his remarks on a preliminary version, and to Alicia Di Paolo for her valuable and indispensable linguistic help. This joint work was supported by a subsidy CAPES/COFECUB (Number 813-14).

In order to answer this question in favour of the second option, in section III we suggest identifying a mathematical theory with a system of rules of authorizations, and we distinguish between canonical proofs and enthymemathical proofs of a given theory. Finally, in section IV, we conclude with a more general methodological discussion about the kind of reconstruction of theories that our approach implies.

II. A case study: the application of Postulate 1.2 in *The Elements*

Euclid formulates the first three postulates of the *Elements* in this way[1]:

1. To draw a straight-line segment from any point to any point.
2. To produce a straight-line segment continuously in a straight line.
3. To describe a circle with any centre and distance.

The three postulates are applied in the solution of the first two propositions in the *Elements,* which are problems[2]:

Prop. I.1. On a given segment to construct an equilateral triangle.

Prop. I.2. To place at a given point (as an extremity) a segment equal to a given segment.

---

[1] As usual, we quote definitions, postulates, common notions and propositions of the *Elements* in Arabic characters, preceded by the book number in Roman characters, according to Heiberg's edition (Euclid, *Elementa)*. We have taken into account the translation by Thomas L. Heath (Euclides *EEH*); but, we have also granted ourselves some changes in order to use, from our point of view, a more appropriate terminology. The most relevant cases of these changes are related to the adjective 'εὐθεῖα'. After using it as a genuine adjective in Definition 1.4 and in Postulate I.1 to coin the expression 'εὐθεῖα γραμμή', Euclid starts using it as a nominalised adjective as well. In particular, in Postulate I.2, he uses the adjective 'πεπερασμένη' to coin the expression 'πεπερασμένη εὐθεῖα'. Literally, 'εὐθεῖα γραμμή', as well as 'εὐθεῖα', when used as a nominalised adjective, should undoubtedly be translated as 'straight line', and 'πεπερασμένη εὐθεῖα' as 'finite straight line'. Still, it seems clear that in the three cases Euclid's intended reference is to straight-line segments. As this is crucial, to avoid any misunderstanding, we shall directly translate the three terms as 'straight-line segment', or only 'segment' when no confusion is possible.

[2] As usual, we distinguish the propositions in the *Elements* in problems and theorems. A problem demands the construction of a geometrical object (a point, a straight, an angle, a figure, etc.) under certain conditions, and requires a solution. A theorem states that geometrical objects of a given kind have certain properties, or that they are in a certain relation, and requires a proof. However, it is important to point out that the solution of a problem always includes, at its final stage, a proof that the object constructed in the established way satisfies the conditions of the problem. This suggests understanding the solution of a problem as the proof of a (meta-) theorem which states that the problem has a solution (which can be obtained as the solution shows). In spite of the fact that, in the versions of the *Elements* that we have received, these two kinds of propositions are not explicitly distinguished, the distinction is made perfectly clear by the fact that Euclid adopts two different canonical forms in the two cases, both for the formulation of the proposition itself and for the subsequent arguments (solutions and proofs). The classic *locus* in which this distinction between problems and theorems is explicitly drawn and widely discussed is Proclus' commentary on the first book of the *Elements (*Proclus *CEELF*, esp. pp. 77-8).

But, while in the solution of Proposition I.1, Postulates I.1 and I.3 are applied in an easily intelligible way; in the solution of Proposition I.2 we find a less intelligible sequence of applications of Postulates I.2 and I.3 which deserves attention.

The solution to this problem is simple (Figure 1): given a segment *BC* and a point *A*, Euclid constructs the equilateral triangle *ABD* on *AB*, according to Proposition I.1; and then, by Postulate I.2, segments *DB* and *DA* are produced up to two arbitrary points *F* and *E* far enough from *B* and *A*. Drawing these points far enough from *B* and *A* means that, when describing a circle with centre *B* and distance *BC* according to Postulate I.3, that circle cuts *DF* at a point, say *G*, and then, when describing a circle with centre *D* and distance *DG*, again according to Postulate 1.3, that another circle cuts *DE* at another point, say *L*. It is easy to prove that *AL* is equal to *BC,* so that its construction solves the problem.

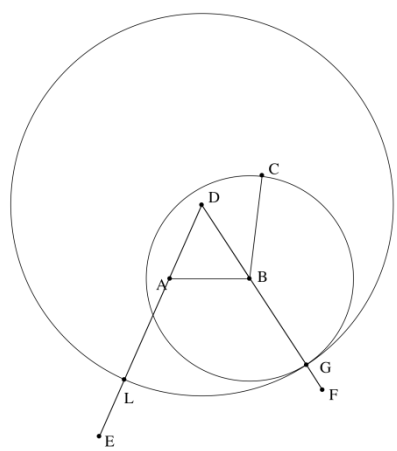

Figure 1

(Diagram associated with the solution of Proposition I.2)

What deserves attention is the indeterminacy of the procedure which results from applying Postulate I.2 first, and then Postulate I.3: how is it possible to know where segments *DB* and *DA* should be produced up to? Why does Euclid not apply Postulate I.3 first for drawing a circle of radius *BC* with centre *B*, so as to produce the segment *DB* up to it, and so construct *G*? And then, why is Postulate I.3 not applied again for drawing a circle with centre *D* and radius DG, so as to produce the segment *DA* up to it, and so construct *L* (Figure 2)? How can Euclid's procedure, which is, so as to say, not genuinely constructive, be justified?

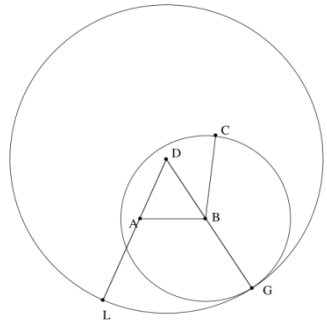

Figure 2

(Diagram associated with the alternative solution of Proposition I.2)

Certainly, the formulation of Postulate I.2 in itself presents the possibility of the two applications[3]. The problem lies in the fact that unlike as it happens with Postulates I.1 and I.3, the output of Postulate I.2 is not univocally determined by its input. To be so, the segment would have to be produced up to meet a line, according to the second possibility. But this is not what the Postulate allows explicitly, since its formulation does not specify up to which point the segment would have to be, or could be produced. Then, even if it were applied in view of the second possibility, what would make the output univocal would not be the Postulate by itself, but something that is constructed independently of its application, that is to say, in our alternative reconstruction, the already constructed circles with centres *D* and *B*, respectively. We have referred to the first procedure as not genuinely constructive to highlight the fact that, by following it, there is no way to determine up to where the given segments should be produced in order to obtain points *F* and *E*; all what can be made is choosing arbitrarily where (or when) to stop producing them, taking into account the fact that it should not be too close (or soon), so as not to allow the construction as it is indicated.

This attitude does not seem to be consistent with the constructive rigor which characterizes most of Euclid's arguments. However, if we trust in the different versions of Euclid's text that we have received, and, particularly, in Heiberg's reconstitution, it is a fact

[3] Our exposition of Euclid's construction with the corresponding figure is based on Heiberg's edition (Euclid, *Elementa*). The topological configuration of the diagram would be modified if the position of point *A*, in relation to segment *BC*, were different from the one that is presented here. As Proclus also observed in his commentary (Proclus *CEELF*, pp. 225-228), there would have to distinguish cases (as it also happens with many other solutions or proofs of Euclid's propositions). In spite of the fact that the difficulty presented here would not appear in all the cases, it is not necessary to consider them (for that purpose, see Euclid *EEH*, pp. 245-246).

that in the solution of Proposition I.2, Euclid proceeds according to the first possibility and not to the second one. But it is a fact, too, that Euclid does not always proceed explicitly in this way in similar situations.

For example, considering the proof of Proposition I.16 (this time, a theorem):

Prop. I.16. In any triangle, if one of the sides be produced, the exterior angle is greater than either of the interior and opposite angles.

In the proof, once the middle point *E* of the side *AC* of a given triangle *ABC* is constructed (Figure 3), after drawing segment *BE*, Euclid produces it up to *F* making *EF* equal to *BE*.

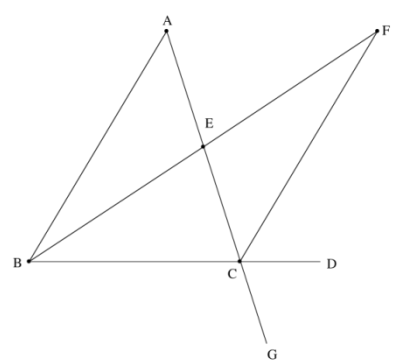

Figure 3

(Diagram associated with the proof of Proposition I.16)

Euclid says nothing about how point *F* is constructed, but he just requests *BE* to be produced up to *F* in such a way that *EF* is equal to *BE*. What procedure should be followed to carry out that construction? Should *BE* be produced far enough up to a point *Z* so as to then describe a circle with centre *E* and distance *BE* cutting *BE* in *F*? Or, should the circle with centre *E* and distance *BE* be described first, so as to then produce *BE* to meet it in *F*?

There is at least one case in which Euclid follows explicitly the second possibility. It is in the solution of Proposition II.14 (another problem, the only one in Book II):

Prop. II.14. To construct a square equal to a given rectilinear figure.

In the solution, after constructing the rectangle *BCDE* equal to the given figure *A* (Figure 4), according to Proposition I.45, and having produced *BE* up to *F* making *EF* equal to *ED*, as in the proof of Proposition I.16, Euclid constructs, according to Proposition I.10, the middle point *G* of *BF*, describes a semicircle with centre *G* and distance *BF* and produces the segment *DE* up to meet this semicircle in *H*, so as to then prove that the square constructed on *EH* is equal to the rectangle *BCDE* and, in consequence, equal to figure *A*, which is what it was required to do.

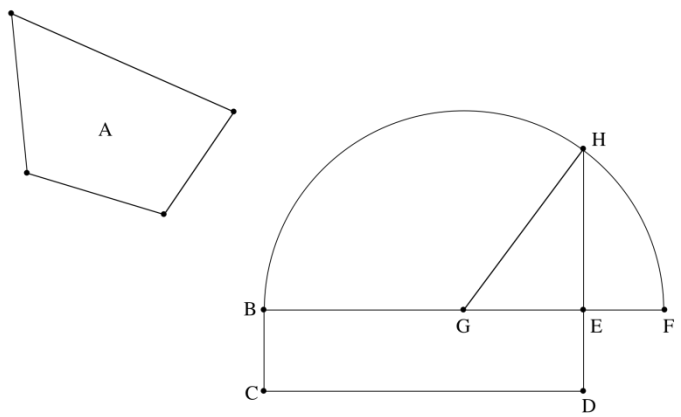

Figure 4

(Diagram associated with the solution of Proposition II.14)

In a previous paper[4], we examined these discrepancies in Euclid's exposition, and we suggested a possible explanation of them. In a few words, we observed that the solution of Proposition II.14 does not depend on the fact that the searched for segment (the side of a square equal to *A*) let be the extension of a side of a rectangle equal to *A*, since the only relevant thing is that this segment is a cathetus of a right-angled triangle of which the other cathetus is equal to *GE* and the hypotenuse equal to *GF*.[5] From this, we inferred that Euclid allowed himself to apply Postulate I.2 as in Proposition I.2 when the solution depends on the fact that the relevant segment is got by producing a given segment in its position, but he constrained himself to apply it as in Proposition II.14 when it is not so.

[4] Lassalle Casanave and Panza 2012.
[5] *Ibid*., p.113.

In that same paper, we also observed that a way to understand Postulate I.2, which would eliminate the problem of lack of univocity of the output, would be to simply assume that this postulate allows to produce a given segment into a(n infinite) straight or half straight-line: in the first case, the output (the straight line) would be univocally determined by the given segment; in the second case, the output (the half straight-line) would be univocally determined by the given segment and the choice of the extreme as from which it extends. It could also be thought that this is the way in which Euclid conceives the postulate, though, for simplicity, he replaces the straight- or half straight-line by a long enough segment. If this conclusion were correct, it would imply that the role of straight and half straight-lines in the *Elements* would be much more important than what it is commonly thought to be. In effect, according to this interpretation, which could be called 'infinitist', Postulate I.2 would involve in itself straight- or half straight-lines, so that these would appear in all the constructions in which this postulate is applied, instead of appearing only when trying to prevent the proliferation of cases, as it happens in the solutions of Propositions I.12 and I.22.

According to the infinitist interpretation, Postulate I.2 would have by itself, as well as Postulates I.1 and I.3, an univocal output determined by its input. On the contrary, if we assume that this postulate does not let construct a straight or half straight-line, but a segment, the only way to guarantee its output to be univocal would be to set out as condition of its application that there is another segment or circle up to which the segment can be produced. However, in the latest case, as it has already been observed, the postulate would have an univocal output only dependent on the context of its application and not by itself. Finally, it could also be simply admitted that the output of the postulate is not univocal, which would agree with conceiving it as such to allow producing a given segment enough to reach an arbitrary point, as it seems to be the case in the solution of Proposition I.2.

Therefore, the problem lies on the interpretation of Postulate I.2. How should this postulate be understood? Is there a unique way of understanding it which conforms to all its applications, or does Euclid allow himself to understand it differently depending on each of them? In our previous work, we considered these questions from the point of view of the

interpretation of Euclid's text. Presently, we would like to change our attitude and aim at a more general problem, which our case study of Postulate I.2 allows us to set as an example.

It seems natural to consider the *Elements* not only as a collection of solved problems and proved theorems, but also as a mathematical treatise whose main objective is to set forth a theory and to teach a mathematical practice according to (or, in better words, within) this theory. Thus, for instance, the first six books of the *Elements* would set forth a theory of plane geometry and would teach to practice it according to (or, in better words, within) that theory[6]. From this point of view, the question would then be the following one: how would we have to proceed, when applying Postulate I.2, if we would like to do plane geometry according to (or within) Euclid's theory? In other words: how would we have to understand this postulate to explain it to someone who would like to learn this theory? The same questions, *mutatis mutandis,* could be asked in relation to many other mathematical texts of the past, to the theories which those texts expound, and to the different aspects of those theories which, as in the case of Euclid's Postulate I.2, are not made perfectly clear in them.

Now, in relation to these issues in general, as well as in relation to the previous questions about Postulate I.2 in particular, it can be thought that the historian would have done all he could and had to do if she/he had checked the whole content of the relevant text. Thus, in the case of Euclid's Postulate I.2, the historian could only observe that the postulate is applied in one way in the solution of Proposition I.2 and in a different way in the solution of Proposition II.14, and that, in many other cases, as in the proof of Proposition I.16, the way in which it is applied is indeterminate. Consequently, there would not be anything else to ask.

From another point of view, it could also be alleged, in a way which could be considered as complementary to the previous one, that many mathematical texts of the past cannot be considered as expositions of genuine theories, precisely because of the fact that they are ambiguous in many aspects, which can only be avoided by means of an appropriate

[6] If the magnitudes which Book V are about are simply the same as the ones which Books I-IV deal with, that is to say, straight-line segments, polygons and rectilinear angles, Book V would be part of the exposition of plane geometry. It is, however, a quite complex question whether this is so, or Book V is rather intended to deal with whatever possible magnitudes (also if no mention of them is made in the foregoing Books), or, even, whether it is intended to deal with magnitudes in general, implicitly defined within the theory of proportions itself. We cannot consider this issue here.

formalization which those texts are far from presenting. If it were so, questions as the previous ones, which aim at identifying a uniform procedure which those texts do not set, would have no more sense.

In this apparent dead-end street, which would oblige to declare our questions as illegitimate, we would like to claim for the philosopher of mathematical practice, which flows between the Scylla of logical analysis and the Charybdis of the history of mathematics, the possibility of legitimizing and attempting to answer them. This is the aim we try to achieve in the next section.

III. Enthymemathical and canonical arguments

Our main idea is that the documents which are the habitual sources of the historian of mathematics, not only allow an analysis which extrapolates a sequence of acts, ideas or results, what historians teach us to do in many different ways in their daily work, but they also allow an analysis which extrapolates a system of mathematical theories, to which it is perfectly plausible to give their own life, relatively independent of the texts which originally present them, as it is frequently done with the current mathematical theories (which are taught, in most of the cases, in a way which is absolutely independent of the consideration of its historical origin).

This idea is based on a conception of mathematical theories according to which a theory is identified with a space of possibilities of argumentation, with a reasonably clear system of authorizations or, by analogy with legal systems, with a set of power-conferring rules[7], within which a practice is developed. This practice could be simply described as the very activity which mathematics consists of. But this extrapolation is neither a historical, nor a logical reconstruction; it is rather a reconstruction of systems of possibilities for the elaboration of acceptable arguments.

Let us take our example. The solution of Proposition I.2 by Euclid can be thought of as an argument which agrees with the rules of authorizations of Euclid's plane geometry, thought as a theory in the foregoing sense. To set another example, the same can be said about a proof within any formal theory. Instead of considering a formal theory as a system

[7] For a brief presentation of this idea, see Lassalle Casanave 2006.

determined by its language and its axioms and/or inference rules, we can consider it as a space of possible inferences from some formulae of that language to another formula of that same language. Thus, a proof within a formal theory could be thought of not as much as a sequence of formulae, but as the actualization of some of those possibilities[8].

This observation should be enough to understand that, from the point of view we are presenting, there is no difference between a clearly informal theory (at least for the current logical criteria), such as Euclid's plane geometry, and a modern formal theory (according to the same criteria). Simply, these possibilities, or rather, the corresponding rules of authorizations, present different forms in the two cases. The second case is about the possibilities of writing formulae, and the main competence required in order to allow adopting the corresponding rules is the capacity to differentiate and recognize tokens of inscription-types. The first case is about the possibilities of generating objects represented by diagrams and of attributing properties and relations to these objects, and the competences required in order to allow adopting the corresponding rules include, among others things, the capacity of appropriately using diagrams in the justification for the attribution of those properties and relations.

In both cases, there are also different ways of raising the relevant possibilities. In a formal theory these possibilities are raised in such a way that, in principle, they are immediately clear for an epistemic subject with the appropriate intellectual and cognitive competences: in principle it should be always clear for that subject if the writing of a certain formula in a certain situation is allowed or not[9]. On the contrary, in Euclid's plane geometry, as well as in many other important mathematical theories, it is not the same: in some cases it may not be clear, even for such a subject, if anything is allowed or not[10].

---

[8] This does not mean denying that a formal proof is a sequence of formulae, but conceiving that sequence as the actualization of those possibilities. From this point of view, it is the coding of the space of possibilities which a mathematical theory consists of what determines what an acceptable argument in this theory is (or establishes, at least, the conditions that it has to comply with or the criteria under which it can be recognized as such). And it is also this coding which determines which of these acceptable arguments can be considered as proofs in the theory (or establishes, at least, the relevant conditions or criteria).

[9] The specification 'in principle' is used to set aside the cases in which such possibility is excluded for physical reasons, for example, if the formula is too long and complex for its structure to be identified by a subject with human cognitive limits or if it is written with ink which is too pale, etc.

[10] Evidently, there are also other important differences between the two cases that matter at this point. A very important one is related to the way in which the actualization of a possibility is associated to obtaining a piece of information by an epistemic subject who is operating within a theory.

The case of the application of Postulate I.2 in the solution of Proposition I.2 is one of those cases. It could be said that if Euclid's text describes the solution of the problem in such a way that it includes the production of segments *DB* and *DA* up to two arbitrary points *F* and *E,* far enough from *B* and from *A*, then the possibility of producing a given segment far enough up to a an arbitrary point has to be included among those granted by the theory that the text is presenting. Although this is certainly a plausible attitude, there is another one equally plausible.

In order to approach to it, let us think for a moment in the way in which a proof is exposed within a formal theory in very many occasions (it could be said it is so in most cases, except for didactical situations): all the formulae of the sequence of which the formal proof consists are not written down; on the contrary, enough instructions are given to write these formulae down. More precisely, to say that these instructions are enough means that an epistemic subject with the appropriate intellectual and cognitive competences (having enough time, pencils, paper and patience) would be able to write down the formulae in question.

Then, would it not be possible to think that Euclid´s text works in the same way, too? And that this text, instead of presenting the solution of the problem in the allowed standard way within the theory in question, merely provides enough instructions so as to allow an epistemic subject with the appropriate competences, including the knowledge of the permitted possibilities, to obtain a solution in the allowed standard way? The set of those instructions (as much to one case as to the other, and to all the cases in which a similar situation is repeated) could be then thought of as an enthymemathical argument (a proof in the case of I.16, a solution as in that of I.2 or in II.14), but not in the sense of an argument which lacks some premises or other crucial components of it (in which case there would not be a valid argument, and, in particular, certainly not a proof) but in the aforementioned sense of an argument which is not required to make all its components explicit when expounded for an epistemic subject with the appropriate competences[11]. The detailed

[11] The notion of enthymeme is a crucial notion in Aristotle's rhetoric (*Reth*, 1356b). According to C. Rapp 2010, for Aristotle an enthymeme is "what has the function of a proof or demonstration in the domain of public speech". If we agree with this, our use of this notion to refer to a type of mathematical argument conveys the idea that such an argument, for example a mathematical proof is a kind of public speech, which adapts perfectly well to what we will hold further on in section IV. However, the idea of being able to speak

argument that these instructions allow to obtain according to the possibilities granted by the theory would be, on the contrary, a canonical argument within this theory[12]. From this point of view, the fact that Euclid's text describes the solution of a problem or the proof of a theorem as it does, does not imply that a solution or a proof according to that description is the canonical one. It could be the enthymemathical, rather[13].

For a better understanding of our perspective, let us examine the reconstruction of Euclid's plane geometry in Avigad, Dean, & Mumma (2009). They reconstruct the solution of Proposition I.2 as follows:

Assume L is a line, b and c are distinct points on L, and a is a point distinct from b and c [Fig. 5].

Construct a point f such that $\overline{af} = \overline{bc}$

---

of enthymeme in mathematics, or, in general, of enthymemathical proofs or any other sort of conclusive arguments (as Euclid's solutions of problems should be taken to be), could disconcert those who see an enthymeme as a fallacy, and a proof or conclusive argument, in particular a mathematical one, as a valid argument. According to the perspective on mathematical theories developed here and the corresponding conception of arguments and proofs within such theories, both assumptions are questionable, or, at least, need qualifications. We would not like to take time and space here to argue that an enthymemathical proof or conclusive argument have to be thought of as a proof or a conclusive argument in a genuine sense, rather than as an argument which, despite being acceptable, has not succeeded in becoming valid. For a schematic presentation of the notion of enthymetical proof, see Lassalle Casanave 2008.

[12] This means that in order to code a theory, in the proposed sense of system of authorizations, certain conditions that a canonical proof within this theory has to respect have to be coded.

[13] Although the idea of viewing a mathematical proof as an enthymemathical one, at least *prima facie,* is not common, it is far from being totally new. An example that proves so—also in relation to the proofs in the *Elements* —is a quote we thank Paolo Mancosu for having pointed it out to us, taken from a lecture of John Barrow (Lesson VI, given in 1664). There, Barrow arguments in favour of the thesis that mathematical proofs are causal, thesis against which it was alleged to as counter-example the solution of I.1 of the *Elements*. After his argument, in which we are not interested here, Barrow asserts (Barrow, 1683, p. 105; Barrow, 1734, p. 95; the first reference belongs to the first edition of the original text in Latin, the second one belongs to its first translation into English, which is quoted here): "From which Observations most or all the Instances brought against Mathematical Demonstrations may be overthrown. And consequently, if the particular Syllogisms (brought either for the Construction, or Demonstration of the abovesaid first Proposition of the Elements) be *Demonstrations* simply *scientific*, the Proposition ought to be reckoned as *scientifically demonstrated*. We will therefore examine them; but for brevity's sake, we will substitute *Enthymems* for Syllogisms, and insinuate the Necessity of the Consequence."

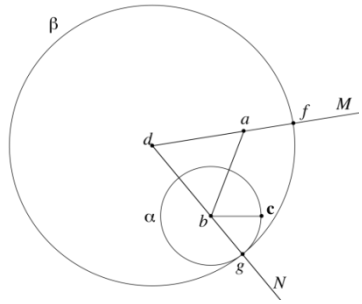

Figure 5

(Diagram associated to the reconstruction of the solution of I.2
by Avigad, Dean and Mumma)

By Proposition I.1 applied to *a* and *b*, let *d* be a point such that *d* is distinct from *a* and *b*, and $\overline{ab} = \overline{bd}$ and $\overline{bd} = \overline{da}$.
Let *M* be the line through *d* and *a*.
Let *N* be the line through *d* and *b*.
Let α the circle with center *b* passing through *c*.
Let *g* the point of intersection of *N* and α extending the segment from *d* to *b*.
Have $\overline{dg} = \overline{db} + \overline{bg}$.
Hence, $\overline{dg} = \overline{da} + \overline{bg}$ [since $\overline{da} = \overline{db}$].
Hence, $\overline{da} < \overline{dg}$.
Let β be the circle with center *d* passing through *g*.
Hence, *a* is inside of β y [since *d* is the center and $\overline{da} < \overline{dg}$].
Let *f* the intersection of β and *M* extending the segment from *d* to *a*.
Have $\overline{df} = \overline{da} + \overline{af}$.
Have $\overline{df} = \overline{dg}$ [since they are both radii of β].
Hence, $\overline{da} + \overline{af} = \overline{da} + \overline{bg}$.
Hence, $\overline{af} = \overline{bg}$.
Have $\overline{bg} = \overline{bc}$ [since they are both radii of α].
Hence, $\overline{af} = \overline{bc}$.[14]

This is a logically flawless reconstruction. But it is, just that: a reconstruction. And, in fact, it moves away from the original exposition by Euclid in many aspects. One of them is connected to the application of Postulate I.2, in the sense that this reconstruction makes two

[14] Avigad, Mumma and Dean 2009, pp. 46-47.

straight lines take part in it, which are respectively determined by points *d, b* and *d, a*[15], and are given previously to the circles α and β, which cut them in *g* and *f* respectively.

The reconstruction of Proposition 1.2 is part of a more global reconstruction, which concerns the whole Euclid's plane geometry, and wants to show, in particular, what the role of the diagrams is in that geometry. In fact, the basic idea is to reconstruct the proofs and solutions by Euclid in such a way that the reference to the diagrams is dispensable as justification to any step of them (therefore, their usefulness would simply consist in facilitating the understanding with an illustration of an argument which, as such, is independent of that illustration[16]). The changes that have to be introduced to reach that result, in particular the assumptions that have to be made (some of which appear implicitly in the preceding reconstruction of the solution of Proposition I.2), show the work which, in the original version of these arguments, was carried out by the diagrams.

---

[15] The straight line *L* is not represented in the diagram which Avigad, Dean and Mumma add to their reconstruction (figure 5). That depends on the fact that the only thing that matters about this line is that two different points *b* and *c* are taken on it. It is not essential either that point *a* is or not on *L*, and actually, this is not specified. As a matter of fact, this would correspond to the distinction between cases: see n.4). The diagram reproduced in Figure 5 represents a configuration in which point *a* is not on *L*. A configuration in which *a* is on *L* is represented by the diagram that follows, which shows that the construction of the intended segment *af* is perfectly feasible under this configuration.

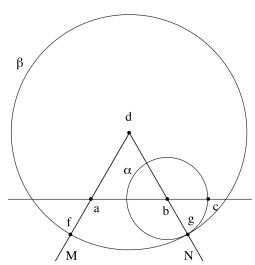

It is natural to ask oneself why Avigad, Dean and Mumma mention the straight line *L* in their reconstruction. The answer can be found in the following quote, which well shows the role that they assign to the straight lines in their reconstruction of Euclid's theory, together with their interpretation of Postulate I.2 within this reconstruction (Avigad, Dean, and Mumma 2009, pp. 731-732; evidently, we must read "straight line" where Avigad, Dean, and Mumma write "line"): "[…] in the *Elements*, Euclid takes lines to be line segments, although Postulate 2 ('to produce a finite straight line continuously in a straight line') allows any segment to be extended indefinitely. Distinguishing between finite segments and their extensions to lines makes it clear that at any given point in a proof, the diagrammatic information is limited to a bounded portion of the plane. But, otherwise, little is lost by taking entire lines to be basic objects of the formal system. So where Euclid writes, for example, 'let *a* and *b* be points, and extend segment *ab* to *c*,' we would write 'let *a* and *b* be distinct points, let *L* be the line through *a* and *b*, and let *c* be a point on *L* extending the segment from *a* to *b*.' Insofar as there is a fairly straightforward translation between Euclid's terminology and ours, we take such differences to be relatively minor."

[16] When presenting their examples of proofs within the formal system *E* which, according to what they explain in the summary of their article (*ibid.*, p. 700), provides "a faithful model of the proofs in Euclid's *Elements*", Avigad, Dean and Mumma write: "We include diagrams to render the proofs intelligible, but we emphasize that they play no role in the formal system" (*ibid.*, p. 734).

It is not clear if the introduction of infinite straight lines determined by two given points is part of these changes in the author's intention; however, that is not relevant to what we are concerned with here. The important thing is that what Avigad, Dean, and Mumma propose can be read as a reconstruction of Euclid's plane geometry, understood as a theory in our former sense, in relation to which the solutions and proofs by Euclid, in their ordinary forms, are conceived of as enthymemathical arguments in the aforementioned sense. To move from those enthymemathical arguments to the canonical ones, we must, among other things, eliminate the diagrams in favour of the application of appropriate assumptions (which Euclid would not explicit), and introduce straight lines (or, more appropriately, half straight-lines) where Euclid, for instance, applies Postulate I.2.

It is important to point out that a reconstruction as that by Avigad, Dean and Mumma is essentially different from another kind of reconstruction which intends to establish Euclid's results (or, more appropriately, a reformulation of those results) within a theory manifestly different from the original one. A very clear example to this is the reconstruction of Euclid's plane geometry within the geometrical theory formulated by Hilbert in *Grundlagen der Geometrie.* Although all the theorems and problems in the *Elements* can be proved in the *Grundlagen*, Hilbert's theory neither respect nor intend to respect the nature (in particular, the heterogeneous character) or the structure of the Euclid's arguments.[17]

This distinction between a reconstruction of Euclid's plane geometry within another theory, such as Hilbert's, and reconstructions of Euclid's plane geometry such as the ones formulated by Avigad, Dean, and Mumma, would have to be enough to make it clear that the work that has to be done to obtain a reconstruction of the second type is essentially different from the one that has to be done to obtain reconstructions of the first one. A reconstruction of the first type requires some essentially mathematical work whose main objective is to promote a way of progress in mathematics. A reconstruction of the second type, consists, instead, in a conceptual analysis whose main objective is to promote a way

[17] To respect that structure, still not its heterogeneous character, is, on the contrary, Avigad, Dean, and Mumma's aim. About the heterogeneous character (due to the joint utilization of language and diagrams) of Euclid's proofs, it must be mentioned here the influential "Euclid's Diagram (1995)" by K. Manders (published only thirteen years later: Manders 2008), of which Avigad, Dean and Mumma's reconstruction is in debt to, although (as already observed) the authors set as a goal the logical analysis of those proofs, showing in this way the dispensability of the diagrammatic resources. Although we will not discuss it here, the reconstructions of Euclid's plane geometry in Mumma 2006 and Miller 2007 try to justify the use of diagrams in Euclid's proofs, not to dispense them. For diagrams and geometrical proofs, see also Norman 2006.

of progress in understanding the way in which mathematics works. In other words, whereas in the first case the progress which is meant to be promoted concerns the understanding of the object itself of mathematics (whatever it is), the progress which is meant to be promoted in the second case concerns the understanding of mathematics as such, that is to say, the way in which it treats its object. Our idea is that there are different forms of mathematics and different ways of doing mathematics. On the one hand, the philosophy of mathematical practice intends to identify these forms and way. On the other hand, it aims to understand what is common to them, that is to say, what characterizes mathematics as an intellectual activity of a specific nature, beyond these different forms and ways.

To suggest and confront different reconstructions of the second type of one same theory or of different ones just contribute to fulfil this objective. For example, to confront different reconstructions of a same theory means to confront different ways of understanding the same texts, considering they present different systems of rules of authorization. In most of the cases, it seems difficult, or even impossible, to identify which one among those systems is the good one, or the most adequate to the original texts, and *a fortiori,* to the authors' intentions. However, there are forms of argumentation in favour of and against a reconstruction instead of another. These are typical of conceptual analysis and are part of the habitual tool box of every philosopher accustomed to it.

To set an example, one could criticize Avigad, Dean and Mumma's reconstruction for it contravenes two essential features of Euclid's arguments: on the one hand, the elimination of diagrams in favour of assumptions of principles that work as supplementary axioms contravenes the heterogeneous character of these arguments; on the other hand, the admission of infinite geometrical objects contravenes their local nature. This is not the suitable place to develop those critics, to which Avigad, Dean and Mumma could certainly respond in many ways. It is enough to observe, limiting ourselves again to the case of Postulate I.2, that one of the authors of the present paper has suggested, in the frame of a more general reconstruction of Euclid's plane geometry, another way to account for the function of this postulate, which, on the one hand, attributes a crucial role to the diagrams and, on the other hand, avoids resorting to (infinite) straight or half straight-lines, with no need to accept non-genuinely constructive procedures (Panza 2012). The idea is to account for Postulate I.2 by means of the following rule:

> If a segment is given and the concrete line representing it is such that it can be continued so as to meet a concrete line representing another given segment or a given circle, then the former segment can be produced up to meet this other segment or this circle; hence, if a segment *a* and another appropriate line *b* (either a segment, in turn, or a circle) are given, then the following other objects are susceptible of being given: two other segments, one of which, let us say *c*, extends *a* up to *b*, while the other, let's say *d*, is formed by *a* and *c* taken together; a point on *b* at which both *c* and *d* meet it; two portions of *b* having this last point as a common extremity (either two segments or two arcs of circle.[18]

Euclid's exposition of the solution of Proposition I.2, as we have seen, does not adjust to this rule[19]. But the idea is, precisely, that this exposition presents an enthymemathical argument instead of a canonical one. The reason to give an enthymematical argument in a case as the solution of Proposition I.2, in which such argument does not seem to have any advantage in comparison to the canonical one, could be the following: in this way, Euclid anticipates the exposition of some solutions or proofs for which the enthymemathical argument has evident advantages of simplicity, in comparison to the canonical one, which would imply the construction of many supplementary circles. The solution of Proposition I.22 is a pertinent example.

This proposition requires the construction of a triangle with three sides equal to three given segments, say *A*, *B*, *C*, on condition that any two of those segments taken together are not greater than the remaining one. Let *DE* be a half straight-line. Euclid's solution depends on putting three segments equal to the given ones in sequence on *DE*. Applying Proposition I.3, a segment equal to *A* can be cut off from *DE*; then, being *DE* unlimited, that same operation can be done successively for the other two segments. If *DE* were not unlimited, there would not be any guarantee, in general, that this could be done. What should be done, then, in such a case?

---

[18] Panza 2012, p. 89.

[19] But there is at least a precedent of this interpretation of Postulate I.2. In Alberto Magno's commentary on the first book of the *Elements* (Lo Bello 2003, p. 39-42) the proof of Proposition I.2 proceeds explicitly according to the mentioned rule.

Let us suppose the worst possible situation, in which, instead of the half straight-line *DE*, we consider a segment *DE* lesser than each of the segments *A*, *B*, *C*; let us suppose, too, that a canonical argument within Euclid's plane geometry follows the genuinely constructive rule that we have just formulated. An enthymemathical solution could apply Postulate I.2 either by producing *DE* in a long enough segment to be cut in sequence by segments equals to *A*, *B*, *C* (if we translate `εὐθεῖα ἄπειρος´ by 'unlimited segment', Euclid's arguments could be assimilated to this) or by producing it into a half straight-line (if we translate `εὐθεῖα ἄπειρος´ by 'half straight-line', Euclid's arguments could be assimilated to this, instead). The canonical solution, on other hand, should put segment *A* in an extreme of *DE*, by Proposition I.2, then describe a circle of radius *A*, and produce *DE* up to the circumference constructing a point, say, *G*. Then the second segment should be put on *G* and the same operation should be repeated. And so again with *C*. Evidently, the complexity of the canonical argument would be greater.

IV. Rethoric and mathematical arguments: beyond Euclid

The analysis that has to be carried out over the available documents in order to get a reconstruction as the one we suggest is different (though, complementary rather than opposed) from logical analysis. In concluding our paper, we would like to emphasise some differences between these types of analysis of mathematical theories and arguments and the one we suggest.

What the logical analysis of a mathematical argument looks for is a unique inferential structure (at least, relative to a particular logic chosen for this aim). What a reconstruction of the kind we suggest looks for is to capture a variety of different phenomena which, as such, are independent of that structure, or, at least, are not completely determined by it. The distinction between canonical and enthymemathical arguments would have to allow, for example, to capture the phenomena which depend on giving us proofs to one another (or even to ourselves). Without going any further, it would have to allow to capture the existing differences among the proof that a mathematician gives to another one, the proof published in a specialised journal, the proof a teacher gives to his/her students or the proof given to oneself, etc. These are differences that disappear in the elegant uniformity of logical analysis (and even more, if this involves a complete formalization).

But, if we took this into account, where could we find the conceptual frame which allows an analysis of the differences among these ways to give a proof? The mentioned distinction between enthymemathical and canonical arguments is an element of such conceptual frame: the proofs that we have just distinguished are, in fact, different types of enthymemathical arguments which would correspond, perhaps, to a same canonical argument within a given theory. However, to say this is not enough. What we suggest is to add to this characterisation other tools arising from a viewpoint which could be considered as rhetorical.

The distinction proposed between enthymemathical and canonical arguments already assumes a rhetorical point of view. But it is important to make it clear that we are considering rhetoric in an Aristotelian sense, associated in consequence with valid arguments and appropriate justifications, rather than with mere persuasion (in ciceronian sense) or style[20]. Although for Aristotle rhetoric arguments do not belong to the domain of necessary knowledge, proper of the demonstrative science, our usage of rhetoric tools should not be understood as the rejection of the idea that mathematical truths are necessary and/or *a priori*. From Aristotelian rhetoric we would like to recover the fact that arguments depend on an audience and presuppose what is known by its members. Since, as Aristotles says, "the enthymeme […][is] concerned with things which may, generally speaking, be other than they are […] being […] a kind of syllogism, and deduced from few premises, often from fewer than the regular syllogism; if any one of these [premises] is well known, there is no need to mention it, for the hearer can add it himself. For instance, to prove that Dorieus was the victor in a contest at which the prize was a crown, it is enough to say that he won a victory at the Olympic games; there is no need to add that the prize at the Olympic games is a crown, for everybody knows it"[21]

The dependence of the audience is manifested in the enthymemathical character of the argument, but not because this would be incomplete due to a lack of premises, but for the fact that the competence of the audience makes it unnecessary to explicit them. We would like to use now the notion of audience in connection with our analysis of the concept of a

[20] For the notion of style in mathematics, see Mancosu 2009.
[21] *Rhetoric,* 1357a (translation by J. H. Freese: Aristotle *Rhet*).

mathematical argument. For short, we only consider the case of proofs. What we shall say about them might be easily generalised to other sorts of such arguments.

Formally speaking, a proof is a sequence of formulae. We submit that this result from two acts of reduction: firstly, the theory in which the proof is carried out is reduced to a theory in which the canonical proofs are required to be formal, that is, to consist, precisely, in appropriate sequences of formulae; secondly, the audience of a proof within a theory of this kind is reduced to one whose only relevant competence is taken to be that of recognizing tokens of inscription-types, and of manipulating them according to some rules of inference. Obviously, a formal proof in this sense is not, by definition, enthymemathical. But an audience like this occurs rarely, so as not to say that it is nonexistent in practice.

Our conception of enthymemathical proof within a theory, understood as a system of rules of authorizations, makes possible to take into different sorts of audiences, each of which is characterised by the competences required for conducting and/or understanding a certain sort of enthymemathical proofs. For example, the proofs that a teacher gives to his/her students, those that a mathematician gives to another mathematician (of the same or different level), those that we can give to ourselves, etc., could all be considered as reformulations of canonical proofs, each of which is adapted to a different sort of audiences. Precisely, that is one of the crucial characteristics of rhetoric arguments: the dependence on that which is known (and assumed) by all the members of the audience. Thus, for example, these different enthymemathical proofs might be regarded as consisting of more or less instructions, or of instructions of different nature, depending on the audience.

The fact of taking different audiences and different enthymemathical proofs into account does not seem to us to be incompatible at all with the idea that a theory is characterised, among other things, by the rules or conditions that a canonical proof within it has to respect. On the contrary, it seems to us that, whatever the audiences in question might be, there must be some notion of canonical proof to be used as a parameter for allowing one to properly speak of proofs in all the cases mentioned above: nothing should be legitimacy considered as a proof if it could not be taken as an enthymeme of a canonical proof proper to a certain theory. For example, in modern mathematics, at least for a large part of it, nothing should be legitimacy considered as a proof if it could not be taken as an

enthymeme of a formal proof within an accepted (formal) theory. In the same way, nothing should be legitimacy considered as a proof within the mathematical tradition coming from Euclid (which encompasses a large part of classical mathematics) if it could not be taken as an enthymeme of a canonical proof according to the standards fixed by the *Elements* (which makes evident the importance of fixing these standards, both from an historical and a philosophical viewpoint).

This simple observation is enough to make clear that, from our point of view, audiences not only differ for the enthymemathical versions of the same canonical proofs related to them, but also in relation to the canonical proofs which they are supposed to be able to admit. From this point of view, it is important to add that recognizing the possibility and the existence of different theories, including different types of canonical proofs admitted or admissible by different audiences with their different competences and skills, does not mean admitting that these theories and these audiences are incommensurable. Although we reject the idea of a single universal audience for mathematics *tout court*, we see no reason for excluding the possibility of mutual reinterpretation of mathematical arguments from audience to audience.

With the notion of a theory as a system of authorizations and the notion of an enthymemathical argument and its dependence on an audience, we mainly intend to legitimize a series of questions such as the ones posed in section II in relation to Euclid's *Elements* (and outline their answer). These are questions which are often dismissed or ignored from other perspectives, but which acquire full sense from the perspective we have outlined. Furthermore, we intend to introduce a conceptual tool which could turn out to be fruitful for the analysis of the different forms of mathematical practice.

Bibliographical References

Aristóteles [*Rhet*]. *Art of Rethoric*, Loeb Classical Library 193, Harard Univ. Press, Cambridge (Mass.), 1926. Translation by J. H. Freese.

Avigad, J., Dean, E., Mumma, J. 2009. "A Formal System for Euclid's Elements", *Review of Symbolic Logic*, 2(4): 700-768.

Barrow, I. 1683. *Lectiones Habita in Scholis Publicis Academiæ Cantabrigiensis An. Dom. M.DC.*LXIV, Typis J. Playford, pro G. Wells in Cœmenterio D. Pauli, Londini 1683.

_____. 1734. *The usefulnes of Mathematical Learning [...]*, Printed for S. Austin, at the Angel and Bible in St. Paul's Church-yard, London 1734.

Euclid. *Elementa*, vols. I-IV de *Euclidi Opera Omnia*. B. G. Teubneri, Lipsiæ, 1883-1888. Edited by I. L. Heiberg and H. Menge. 8 vols. + 1 suppl. New edition by E. S.

Euclid [*EEH*]. *The Thirteen Books of the Elements*, second ed. Cambridge University Press, Cambridge: 1926. (Translated with introduction and commentary by Sir Thomas L. Heath; 3 vols.)

Hilbert, D. 1899. *Grundlagen der Geometrie*. Leipzig: Teubner.

Lassalle Casanave, A. 2008. "Entre la retórica y la dialéctica", *Manuscrito*, 31(1): 11-18.

_____. 2006. "Matemática elemental, cálculo y normatividad", *O que nos faz pensar*, 20: 67-72.

Lassalle Casanave, A. & Panza, M. 2012. "Sobre el significado del Postulado 2 de los *Elementos*", *Notae Philosophicae Scientiae Formalis*, 1(2): http://gcfcf.com.br/pt/revistas/filosofia-da-pratica-matematica/

Lo Bello, A. 2003. *The Commentary of Albertius Magnus on Book I of Euclid's Elements of Geometry*. Boston-Leyden: Brill Academic Publishers.

Mancosu, P. (ed.). 2008. *The Philosophy of Mathematical Practice*. Oxford: Oxford University Press.

Mancosu, P. 2009. " 'Style' in mathematics ", in E. N. Zalta (ed), *The Stanford Encyclopedia of Philosophy* (First published Thu Jul 2, 2009): http://plato.stanford.edu/entries/mathematical-style/

Manders, K. 2008. "The Euclidean Diagram". In: MANCOSU, P. (ed.): *The Philosophy of Mathematical Practice*. Oxford: Oxford University Press 2008. pp. 80-133.

Mumma, J. 2006. Intuition Formalized: Ancient and Modern Methods of Proof in Elementary Geometry. PhD thesis, Carnegie Mellon University.

Miller, N. 2007. *Euclid and His Twentieth Century Rivals: Diagrams in the Logic of Euclidean Geometry*. Stanford: CSLI Publications.

Norman, J. 2006. *After Euclid. Visual Reasoning and the Epistemology of Diagrams*. Stanford: CSLI Publications.

Panza, M. 2012. "The Twofold Rôle of Diagrams in Euclid's Plane Geometry", *Synthese*, 186, 2012, pp. 55-102.

Proclus [*CEELF*], 1873. *In primum Euclidis Elementorum librum commentarii*. Teubner, Lipsi . Ex recognitione G. Friedlein.

Rapp, C. 2010. "Aristotle's Rhetoric", in E. N. Zalta (ed.), *The Stanford Encyclopedia of Philosophy* (First published Thu May 2, 2002; substantive revision Mon Feb 1, 2010): http://plato.stanford.edu/archives/spr2010/entries/aristotle-rhetoric/.